THE CONCRETE NZ
CONFERENCE 2018
PROGRESS THROUGH COLLABORATION
Claudelands, Hamilton | 11 – 13 October 2018

PROGRESS TOWARDS EXPERIMENTAL VALIDATION OF PRECAST FLOOR RETROFIT SOLUTIONS

RICK HENRY[1], MIKE PARR[2], NICHOLAS BROOKE[3], KEN ELWOOD[1], ANGELA LIU[4], DES BULL[5,2]

[1] The University of Auckland
[2] The University of Canterbury
[3] Compusoft Engineering Limited
[4] BRANZ
[5] Holmes Consulting

SUMMARY

Recent earthquakes have focussed the attention of the public on the vulnerabilities of some precast concrete floors that have long been known to engineers, while also revealing some previously unknown behaviour types. As a consequence of this attention, demonstration of the efficacy of retrofit solutions for vulnerable floors has become critically important. The ReCast Floors research programme has been recently funded by BRANZ (from the Building Research Levy), EQC, and Concrete New Zealand Learned Society to investigate retrofit solutions for precast concrete floors and involves a number of research institutions throughout New Zealand. A summary of the scope of the proposed research and details of upcoming tests are described.

INTRODUCTION

Precast concrete floors comprise precast floor units with in-situ (often lightly) reinforced concrete topping to form a composite floor system that generally also functions as a diaphragm. Such floors are a common feature of New Zealand buildings, being almost ubiquitous during the 1980s and early 1990s. Precast floors constructed using hollowcore and double tee units have also historically been designed and constructed in ways that make the floors prone to poor performance during earthquakes (Fenwick et al. 2010; Hare et al. 2009). While the details for these floor systems have been improved in new buildings, support conditions for units in existing buildings designed before 2006 are likely to lead to significant damage and potentially collapse during design level earthquakes.

Buildings with precast floors comprise a large percentage of the commercial building stock in all New Zealand cities. New Zealand's extensive use of precast floors in regions of high seismicity is unusual, with in-situ floors more commonly used internationally. Consequently, and in contrast to most other deficiencies found in existing buildings, little international research is available regarding the adequacy of existing precast floors. In this sense, the seismic performance of precast floors are "New Zealand's problem".

The collapse of double tee units in Statistics house (MBIE 2017, 2018a) and widespread damage to other precast floors during the earthquakes that affected Christchurch and Wellington in recent years (Corney et al. 2014; Henry et al. 2017) has highlighted the risk that

failure of precast floors can pose to building occupants. These events have also focussed attention on the difficulties of assessing and improving existing precast floors. The assessment of existing precast concrete floors is covered by Appendix C5G of the relevant New Zealand technical guidelines (NZSEE et al. 2017). An as-yet unpublished revision of these guidelines in early 2018 (Brooke and Elwood 2018) identified that significant unanswered questions existed regarding the performance and retrofit of precast concrete floors. The fact that no retrofit solutions for deficient precast concrete floors have been fully validated experimentally is a particular concern, and casts the structural engineering profession in a poor light with other stakeholders in New Zealand's built environment.

Recognising the urgent industry need for answers to these questions, Building Research Levy funding was obtained from BRANZ in late 2017 to develop a proposal for an extensive three year multi-agency programme of research to address remaining questions about the performance and improvement of existing precast floors. BRANZ (from the Building Research Levy) and EQC, supported by Concrete New Zealand Learned Society and a number of other organisations, have agreed to fund the research programme, which has been dubbed the *ReCast Floors* (REtrofit of preCAST FLOORS) project. The purpose of this paper is to describe the research programme, and to invite comment and feedback on its content.

SUMMARY OF RECAST FLOORS RESEARCH PROGRAMME

The ReCast Floors project has two primary aims:

- Improving understanding of the likely behaviour of precast floors during earthquakes, and
- Developing and validating methods for improving the performance of existing precast concrete floors.

A secondary aim of the project is to improve understanding of the performance and repair of earthquake-damaged precast concrete floors.

As summarised in Figure 1, it is intended to investigate these topics in several different ways, including both laboratory based and 'real world' approaches. These investigations will be undertaken and led by researchers from a number of different institutions in New Zealand, and in some instances are continuations of existing programmes already underway. A key goal of the ReCast Floors project is to act as a focal point for collation and investigation of issues related to precast concrete floors, and for dissemination of findings to industry.

The ultimate goal of the project is to assemble the guidance developed into a single document outlining best practice recommendations and design guidance for the improvement of precast concrete floors. This document would be a companion to the guidance document for assessment of precast concrete floors ('C5G') that is currently being finalised (Brooke and Elwood 2018).

PROJECT PARTICIPANTS AND FUNDING AGENCIES

As noted in the preceding section, the ReCast Floors project is a collaborative programme with the leaders of the project comprising representatives of the key New Zealand agencies that are actively engaged in precast floor research. The identities, affiliations, and project roles of key researchers are summarised in Table 1. It is envisaged that circa five PhD students and two ME students will be involved in the project, with additional support provided by a post-doctoral researcher based at the University of Auckland.

BRANZ have committed to providing the majority of funding for the project, with significant support also committed by EQC. Additional support has been obtained from Concrete New Zealand Learned Society as noted above, along with QuakeCoRE and MBIE through its MBIE Chair arrangement with University of Auckland. In kind support has been committed from

SESOC, NZSEE, and precast manufacturers. Further acknowledgement is due to BRANZ for funding they previously committed to precast floor super-assembly testing in response to a proposal led by Angela Liu.

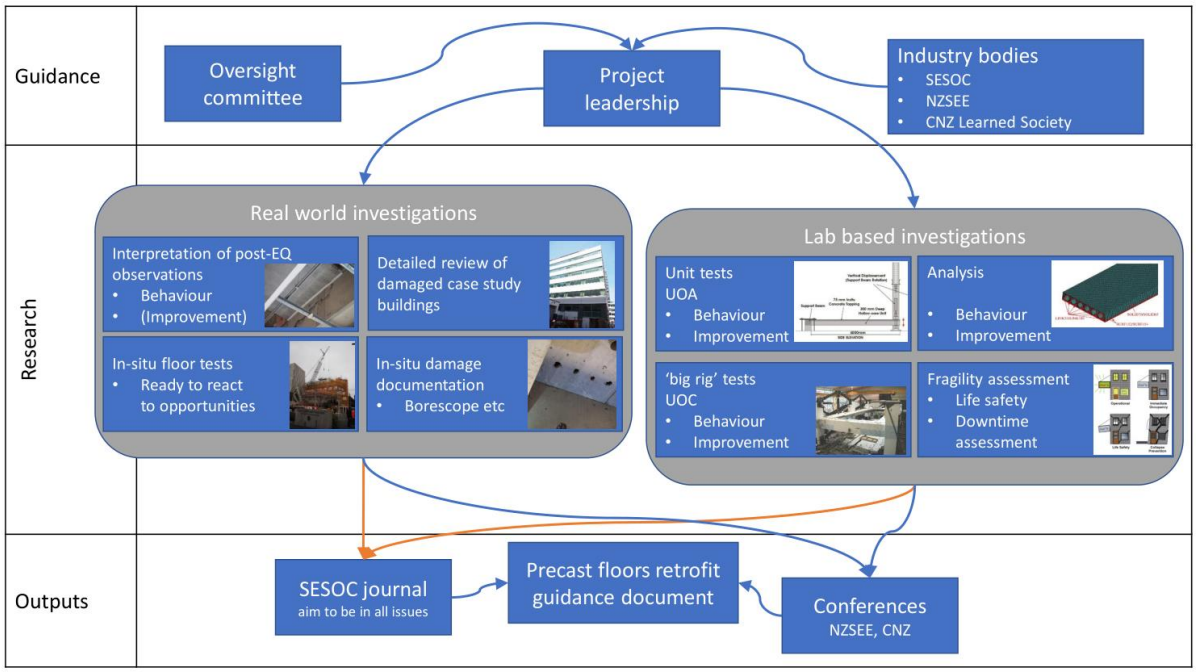

Figure 1: Overview of research projects, oversight arrangements, and expected outputs

Table 1: Project research team

	Affiliation	**Role**
Prof. Ken Elwood	University of Auckland MBIE Chair of Earthquake Engineering	Principal investigator
Dr Rick Henry	University of Auckland	Leader of sub-assembly testing
Prof. Des Bull	Holmes Consulting/University of Canterbury	Co-leader of super-assembly testing
Dr Angela Liu	BRANZ	Co-leader of super-assembly testing
Assoc. Prof. Tim Sullivan	University of Canterbury	Leader of finite element simulations
Dr Lucas Hogan	University of Auckland	Leader of field investigations
Dr Enrique del Rey Castillo	University of Auckland/Concrete New Zealand	Consultant on application of FRP for retrofits
Dr Nicholas Brooke	Compusoft Engineering Limited	Liaison with industry bodies and coordination of outputs

ASPECTS OF PRECAST FLOOR BEHAVIOUR REQUIRING FURTHER INVESTIGATION

Experimental research into the behaviour of precast concrete floors and the improvement of their performance has been undertaken during the last 25 years (e.g. Corney et al. 2018; Fenwick et al. 2010; Hare et al. 2009; Herlihy 1999; Jensen 2006; Lindsay 2004; MacPherson 2005; Matthews 2004; Woods 2008). This research has provided a significant basis of understanding the response of precast floors to earthquake-induced demands. However, further investigation is required to improve understanding of several aspects of precast floor

behaviour and improvement. These topics include those revealed and/or emphasised by recent earthquakes, and topics identified prior to the earthquakes but not fully investigated.

Behaviour of web-supported double tees

Compared to hollowcore floors, reactions from double tees are more concentrated. The concentrated reaction forces, in conjunction with the large lever arm arising where double tees are web-supported, are expected to result in greater spalling. Testing is required to investigate this issue. This may be combined with testing of retrofit brackets intended to provide improved support conditions.

Capacity of loop bar detail for support of double tees

While it is well recognised that loop bar support details for double tee beams are not compliant with NZS 3101 (Hare et al. 2009; MBIE 2018b), it is less clear what capacity can be relied on where the loop bar detail supports double tee floors in existing buildings. Testing is required to investigate this issue. Again, as above this may be combined with testing of retrofit brackets intended to provide improved support.

Negative moment failure of hollowcore floors

Negative moment failure refers to the failure of a hollowcore floor due to exceedance of the strength at the top of the section followed by propagation of cracking through the depth as shown in Figure 2. Such failure typically manifests at the end of the starter bars provided to connect the floors to the supporting structure, and its occurrence is dependent on a number of factors that affect the magnitude of the moment that occurs at that location including the strength of starter bars and the possible presence of 'hairpin' reinforcement or other additional sources of strength. It is also considered probable that the configuration of remedial seating may influence the occurrence of negative moment failure. The significance of all these effects requires at least some further experimental investigation, as does the effectiveness of proposed remedial measures including:

- selective weakening by drilling at the end of the hollowcore plank or otherwise, and
- the use of FRP strengthening to suppress negative moment failure

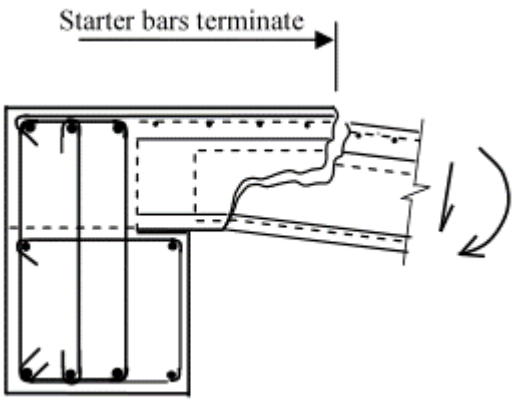

Figure 2: Illustration of negative moment failure (Fenwick et al. 2010)

Torsion of hollowcore planks

Hollowcore planks are theoretically vulnerable to damage and failure due to the imposition of torsional demands. Testing is required to ascertain the accuracy of calculations that indicate the existence of this vulnerability.

Approaches for remediating hollowcore ‘alpha’ slabs

The ‘alpha’ slab refers to a precast floor unit placed adjacent to a parallel frame as shown in Figure 3. During an earthquake, particularly severe multi-directional demands can be placed on alpha slabs. The effectiveness of various remedial measures proposed (PCFOG 2009) for alpha slabs requires experimental investigation. This includes:

- the effectiveness of hanger rods and support beams for improving the performance of ‘alpha slabs’ spanning adjacent to parallel frames and walls
- selective weakening of alpha slabs

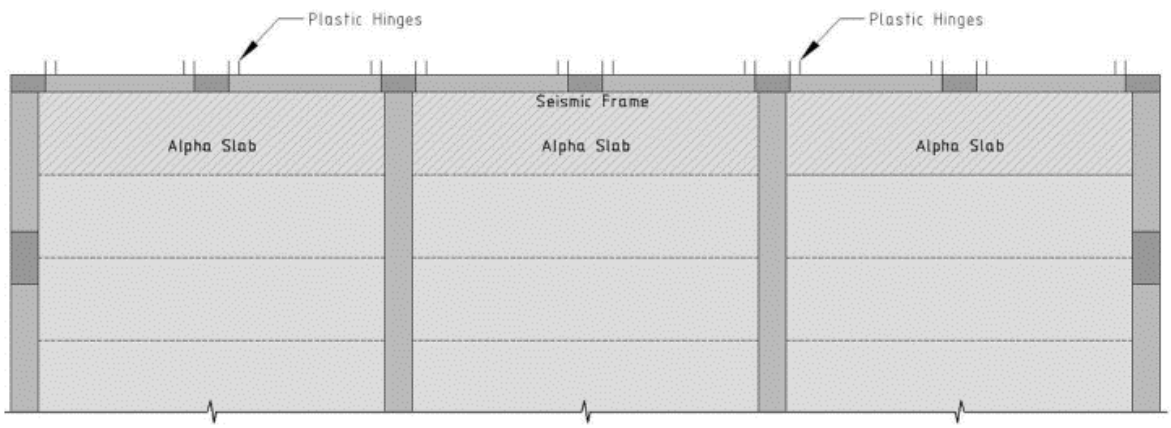

Figure 3: Identification of ‘alpha’ slabs (PCFOG 2009)

PLANNED RESEARCH APPROACHES

As noted, the Recast Floors project will encompass several different investigations undertaken at a number of different facilities. Specifically, the planned research will comprise eight aspects split between two streams of work, namely:

1. Laboratory and analytical research, consisting of:
   (a) Sub-assemblage testing of single units
   (b) Super-assemblage testing of multiple units supported by moment resisting frames,
   (c) Finite element analysis, and
   (d) Assessment of the fragility of precast floors, and

2. Interpretation of real world performance, consisting of:
   (e) Processing of damage assessment data
   (f) Forensic analysis of case study buildings
   (g) Documentation of damage in buildings, and, depending on opportunities
   (h) In-situ testing of precast concrete floors

Extensive crossover is anticipated between the various work items, and most work items will address at least in part each of a number of research topics requiring further investigation. The work items listed above are described in more detail in a recent paper (Brooke et al. 2018), though it is noted that specific details of the programme are still in the planning stages.

While sub-assembly and super-assembly testing are identified separately, and will largely be undertaken at different institutions, it is emphasised that the two types of testing will be complementary to each other. It is intended to undertake a number of tranches of testing, with each tranche undertaken by a single PhD student and typically comprising approximately six sub-assembly tests, and one super-assembly test. Within each tranche, the sub-assembly

tests would be used to refine and focus the detailing finally incorporated in the related super-assembly test for ultimate validation. Two tranches have been preliminarily schemed, focussed on:

- The interaction between seating angle retrofits and negative moment failure, and
- Retrofits required to address negative moment failure.

FIRST TRANCHE LABORATORY TESTING

The first series of tests will focus on the interaction between seating angle retrofits and negative moment failure. The use of an extended seating angle has been the most commonly implemented retrofit solution to date. Previous tests by Liew (2004) showed that when the angle is mounted flush against the bottom of the hollowcore unit, the risk of negative moment failure is increased, as shown in Figure 4. A series of sub-assembly or single unit tests will be performed to investigate a range support conditions and retrofit concepts, with the successful solutions implemented into a super-assembly frame test.

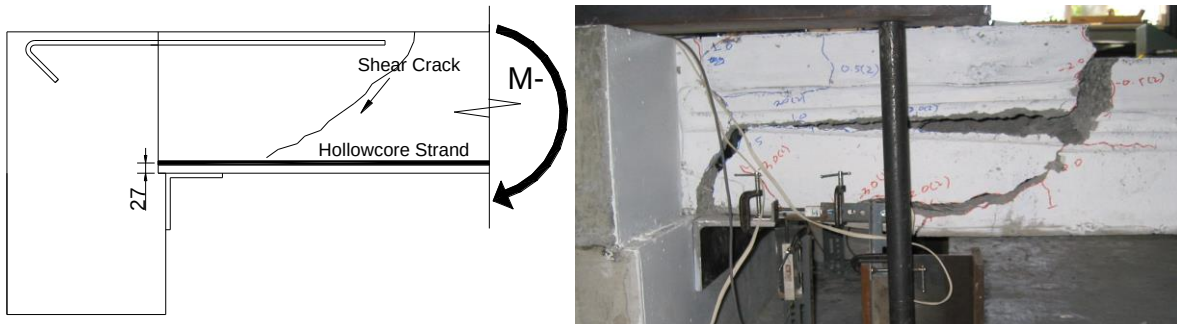

Figure 4: Negative moment failure of hollowcore unit retrofitted with extended seating angle (Liew 2004)

<u>Sub-assemblage testing</u>

As shown in Figure 4, typical sub-assembly testing consists of a single hollowcore unit and a portion of the support beam. The end of the hollowcore unit is subjected to both vertical and horizontal forces to simulate the rotation and elongation demands expected during an earthquake. A facility for hollowcore sub-assembly testing is currently operational at the University of Auckland (Corney et al. 2018).

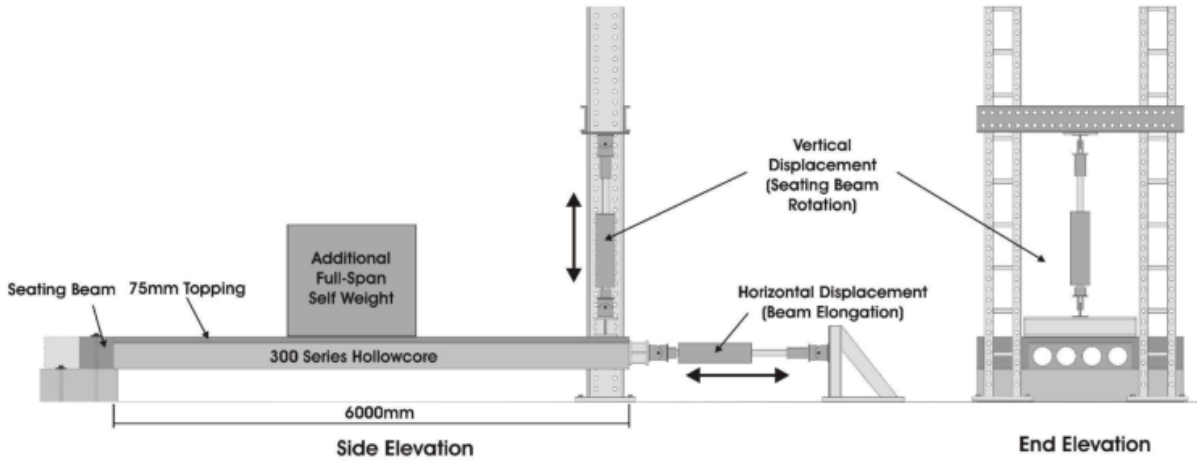

Figure 4: Example sub-assembly test arrangement as used by Jensen (Jensen 2006)

Initially, six sub-assembly tests will be conducted in late 2018, with drawings of the test specimen in Figure 5 and test variations summarised in Table 2. The tests will be performed

with a 200 series hollowcore unit with an initial seating length of 50 mm and HD12 starters at 300 mm c/c that extend 850 mm into the floor topping and lap with 665 mesh. The test units have been designed to be at the boundary between a loss of support (LOS) and negative moment failure (NMF). The unretrofitted test is expected to fail due to loss of support with the calculated negative moment demand at the end of the starters just below that required to crack the section. For the second test a large 200 mm angle will be installed to provide an extended seating length. If the angle is firmly fixed to the support beam and flush with the underside of the hollowcore unit it is expected that the reaction generated will increase the negative moment demand at the end of the starters resulting in NMF.

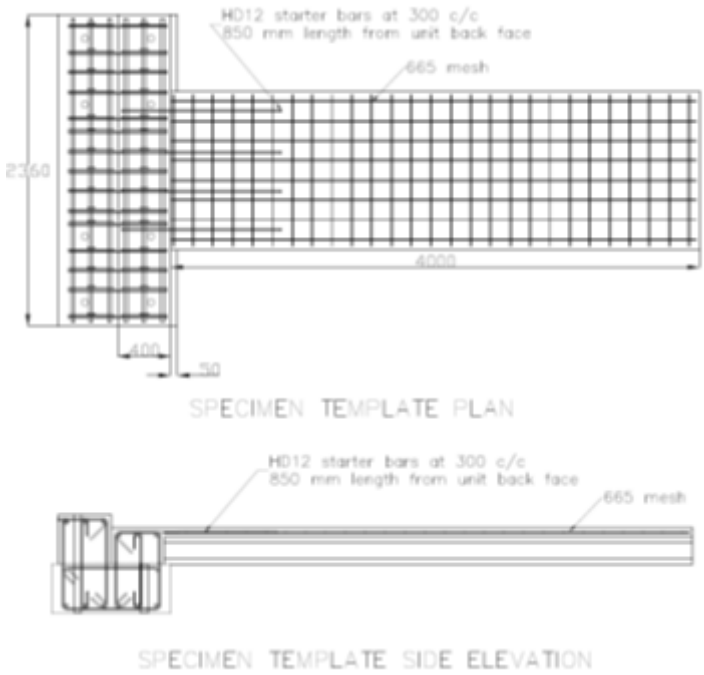

Figure 5: Hollowcore sub-assembly test unit design

Table 2: First tranche hollowcore sub-assembly tests

Test Case	**Failure desired**	**Seating angle**	**Additional gravity load**	**Comments**
1 - Unretrofitted	Loss of seating (LOS)	No	500 kg (Low)	No angle and normal gravity loading – displays loss of seating issue.
2 – 200 mm angle 1 (existing)	Negative moment failure (NMF)	Yes	500 kg (Low)	200 mm angle and normal gravity loading – displays negative moment failure.
3 – 200 mm angle 2 (existing)	Cracking at unit back face	Yes	6,000 kg (High)	200 mm angle and high gravity loading – displays how high gravity loading can prevent NM failure.
4 – Angle removed from soffit	Cracking at unit back face	Yes	500 kg (Low)	Displays how NM failure is avoided and tests if there are issues with the unit landing on the angle.
5 – Selective weakening (saw cut)	Cracking at unit back face	Yes	500 kg (Low)	Displays how cutting starters at the back face can prevent NM failure.
6 – FRP strips on top of the floor	Cracking at unit back face	Yes	500 kg (Low)	Displays how reducing the strength drop-off at the end of starters via FRP strips can prevent NM failure.

Tests 3-6 will investigate modifications that may improve the performance of the retrofitted unit. These consist of an increased gravity load, providing a small gap between the hollowcore unit and the angle, selectively weakening the back of the hollowcore unit, and installing FRP strips to strengthen the negative moment capacity.

Super-assemblage testing

The interaction between precast floors and the structure supporting them is a critical factor in determining the vulnerability of many floors. This interaction cannot be fully investigated using simple component tests and so testing will also be undertaken using appropriate 'super-assemblies' comprising one or more bays of flooring and the associated support structure.

Super-assembly has previously been successfully undertaken at the University of Canterbury (Lindsay 2004; MacPherson 2005; Matthews 2004) to confirm the vulnerability of older hollowcore floor detailing and to verify the performance of new recommended details.

A super-assembly has been designed as shown in Figure 6 and will be tested at the University of Canterbury in mid-2019. The super-assembly may incorporate both existing and retrofitted hollowcore details, based on the outcomes of the sub-assembly testing.

CONCLUDING REMARKS

While it has been understood for over a decade that existing precast concrete floors may exhibit undesirable behaviour during an earthquake, this fact has been brought to prominence amongst both engineers and the public by recent earthquakes that affected Christchurch and Wellington. In this context it is unacceptable that no recognised guidance exists detailing methods for improving the performance of existing precast floors, and that the methods for improving such floors have not been rigorously validated. The programme of research that BRANZ and EQC have committed to fund and that is described in this paper has been established to address these needs.

The outputs of the research programme will be made available progressively over the next three years, with the various outputs ultimately collected and re-published as a standalone guidance document describing methods for the improvement of existing precast concrete floors.

ACKNOWLEDGEMENTS

The funding committed by BRANZ (from the Building Research Levy), EQC, and Concrete New Zealand Learned Society that will enable the ReCast Floors project to proceed is gratefully acknowledged, as is the time provided by the project oversight group during development of the proposal for the project. Additional thanks are due to BRANZ for the funding provided to accelerate development of the proposal for the project, and for the funding previously committed to testing of precast floor super-assemblies.

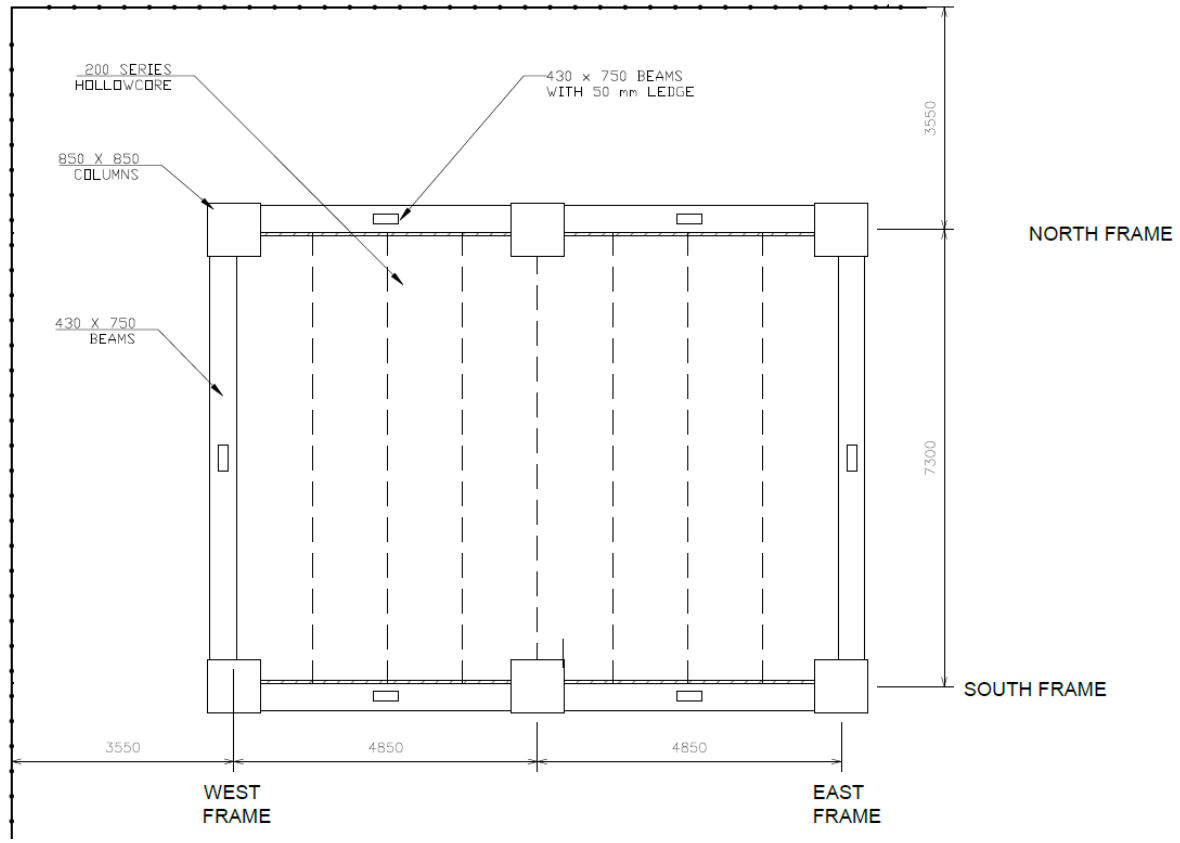

Plan view

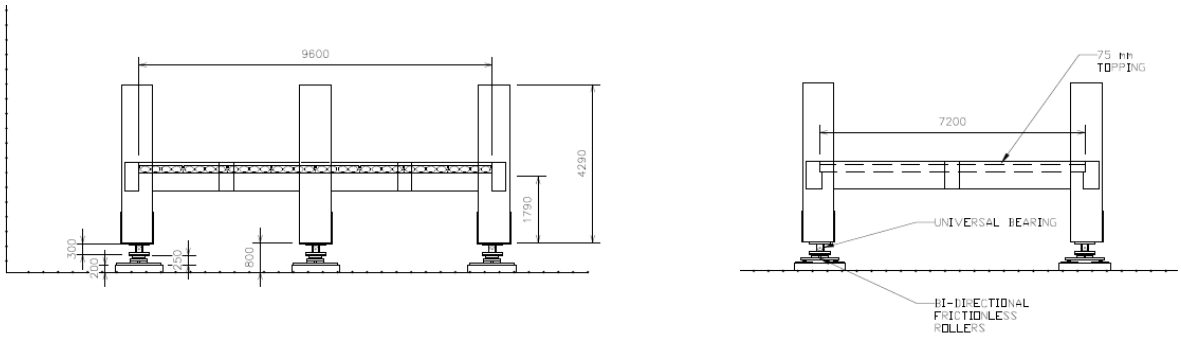

Elevations

Figure 6: Super-assemblage test setup

REFERENCES

Adawi, A., Youssef, M. A., and Meshaly, M. E. (2016). “Finite Element Modelling of Composite Hollowcore Slabs.” *Proceedings CSCE Conference*, Canadian Society for Civil Engineering (CSCE/SCGC), London, Ontario, 11p.

Applied Technology Council. (2012a). *FEMA P-58-1 Seismic Performance Assessment of Buildings: Volume 1 - Methodology*. Federal Emergency Management Agency, Washington, DC, 319p.

Applied Technology Council. (2012b). *FEMA P-58-2 Seismic Performance Assessment of Buildings: Volume 2 - Implementation Guide*. Federal Emergency Management Agency, Washington, DC, 365p.

Applied Technology Council. (2012c). “FEMA P-58-3 Seismic Performance Assessment of Buildings: Volume 3 - Supporting Electronic Materials and Background Documentation.” *ATC-58 Project Overview*, <https://www.atcouncil.org/36-projects/projects/85-atc-58-project> (Sep. 18, 2014).

Bradley, B. A., and Hughes, M. (2012a). *Conditional Peak Ground Accelerations in the Canterbury Earthquakes for Conventional Liquefaction Assessment* (Technical Report Prepared for the Department of Building and Housing). Bradley Seismic Limited, Christchurch, New Zealand, 22p.

Bradley, B. A., and Hughes, M. (2012b). *Conditional Peak Ground Accelerations in the Canterbury Earthquakes for Conventional Liquefaction Assessment: Part 2* (Technical Report Prepared for the Ministry of Business, Innovation and Employment). Bradley Seismic Limited, Christchurch, New Zealand, 19p.

Brooke, N. J., and Elwood, K. J. (2018). "Summary of Proposed Changes to Section C5 of the Seismic Assessment Guidelines." *Proc. NZSEE Conference*, New Zealand Society for Earthquake Engineering, Auckland, New Zealand.

Brooke, N. J., Elwood, K. J., Bull, D. K., Liu, A., Henry, R. S., Sullivan, T., Hogan, L. S., and del Rey Castillo, E. (2018). "ReCast Floors - Seismic Assessment and Improvement of Precast Concrete Floors." *SESOC Journal*, 31(2).

Brunesi, E., Bolognini, D., and Nascimbene, R. (2015). "Evaluation of the Shear Capacity of Precast-Prestressed Hollow Core Slabs: Numerical and Experimental Comparisons." *Materials and Structures*, 48(5), pp.1503–1532.

Brunesi, E., and Nascimbene, R. (2015). "Numerical Web-Shear Strength Assessment of Precast Prestressed Hollow Core Slab Units." *Engineering Structures*, 102, pp.13–30.

Brunsdon, D., Elwood, K. J., and Henry, R. S. (2017). *Wellington City Council Targeted Assessment Programme following the Kaikoura Earthquake of 14 November 2016 Technical Report* (Kestrel WCC TAP Technical Report 20170507). Kestrel Group, Wellington, New Zealand, 60p.

Corney, S., Henry, R. S., and Ingham, J. M. (2014). "Performance of Precast Concrete Floor Systems During the 2010/2011 Canterbury Earthquake Series." *Magazine of Concrete Research*, 66(11), pp.563–575.

Corney, S. R., Elwood, K. J., and Henry, R. S. (2018). "Residual Capacity Testing of Damaged Hollow-Core Precast Concrete Floors." *Proceedings of the NZSEE Conference*, New Zealand Society for Earthquake Engineering, Auckland, New Zealand, 9p.

CSI America. (2016). *Computer program SAP2000 v19*. Computers and Structures Inc., Walnut Creek, California.

CSI Berkeley. (2016). *Computer Program ETABS Ultimate 2016*. Computers and Structures Inc., Berkeley, California.

Fenwick, R. C., Bull, D. K., and Gardiner, D. R. (2010). *Assessment of Hollow-Core Floors for Seismic Performance* (Research Report 2010-02). Department of Civil and Natural Resources Engineering, The University of Canterbury, Christchurch, New Zealand, 152p.

Fratila, E., and Kiss, Z. (2016). "Finite Element Analysis of Hollow-Core Slabs." *Journal of Applied Engineering Sciences*, 6(19), pp.29–33.

Geonet. (2013a). "Magnitude 7.1, Saturday, September 4 2010 at 4:35:42 am (NZST)." *New Zealand Earthquake Report*, <http://www.geonet.org.nz/quakes/region/newzealand/3366146> (Apr. 16, 2013).

Geonet. (2013b). "Magnitude 6.2, Tuesday, February 22 2011 at 12:51:42 pm (NZDT)." *New Zealand Earthquake Report*, <http://www.geonet.org.nz/quakes/region/newzealand/3468575> (Apr. 16, 2013).

Geonet. (2016). "Magnitude 7.8, Monday, November 14 2016, 12:02:56 am (NZDT)." *New Zealand Earthquake Report*, <http://www.geonet.org.nz/ quakes/2016p858000> (Jan. 25, 2017).

Hare, J., Fenwick, R. C., Bull, D., and Built, R. (2009). "Precast Double Tee Support Systems." *Journal of the Structural Engineering Society New Zealand*, 22(1), pp.10–44.

Henry, R. S., Dizhur, D., Elwood, K. J., Hare, J., and Brunsdon, D. (2017). “Damage to Concrete Buildings with Precast Floors During the 2016 Kaikoura Earthquake.” *Bulletin of the New Zealand Society for Earthquake Engineering*, 50(2), pp.174–186.

Herlihy, M. D. (1999). *Precast Concrete Floor Support and Diaphragm Action* (PhD Thesis). The University of Canterbury, Christchurch, New Zealand, 344p.

Jensen, J. P. (2006). *The Seismic Behaviour of Existing Hollowcore Seating Connections Pre and Post Retrofit* (Master’s Thesis). The University of Canterbury, Christchurch, New Zealand, 292p.

Liew, H. Y. (2004). *Performance of Hollowcore Floor Seating Connection Details* (Master’s Thesis). The University of Canterbury, Christchurch, New Zealand, 278p.

Lindsay, R. (2004). *Experiments on the Seismic Performance of Hollow-Core Floor Systems in Precast Concrete Buildings* (Master’s Thesis). The University of Canterbury, Christchurch, New Zealand, 190p.

MacPherson, C. (2005). *Seismic Performance and Forensic Analysis of a Precast Concrete Hollow-Core Floor Super Assemblage* (Master’s Thesis). The University of Canterbury, Christchurch, New Zealand, 246p.

Matthews, J. (2004). *Hollow-Core Floor Slab Performance Following a Severe Earthquake* (PhD Thesis). The University of Canterbury, Christchurch, New Zealand, 521p.

MBIE. (2017). *Investigation into the Performance of Statistics House in the 14 November 2016 Kaikoura Earthquake*. Ministry of Business, Innovation, and Employment, Wellington, New Zealand, 36p.

MBIE. (2018a). *Addendum: Investigation into the Performance of Statistics House in the 14 November 2016 Kaikoura Earthquake*. Ministry of Business, Innovation, and Employment, Wellington, New Zealand, 25p.

MBIE. (2018b). *Warning Against the Use of Loop Bar Details in Flange-Hung Double-Tee Precast Concrete Floor Units that do not Comply with NZS 3101* (Warning 2018/001). Ministry of Business, Innovation, and Employment, Wellington, New Zealand, 3p.

NZSEE, MBIE, EQC, NZGS, and SESOC. (2017). *The Seismic Assessment of Existing Buildings: Technical Guidelines for Engineering Assessments* (Technical Guidelines for Engineering Assessments). Ministry of Business, Innovation, and Employment, Wellington, New Zealand.

PCFOG. (2009). *Seismic Performance of Hollow Core Floor Systems: Guidelines for Design, Assessment, and Retrofit*. Precast Concrete Floors Overview Group (SESOC, NZSEE, and NZCS), Wellington, New Zealand, 163p.

Woods, L. J. (2008). *The Significance of Negative Bending Moments in the Seismic Performance of Hollow-Core Flooring* (Master’s Thesis). The University of Canterbury, Christchurch, New Zealand, 294p.