2011 Maryland Standards and Specifications for Soil Erosion and Sediment Control

December 2011

Maryland Department of the Environment

Water Management Administration

in association with

Natural Resources Conservation Service

and

Maryland Association of Soil Conservation Districts

MARYLAND
DEPARTMENT OF THE ENVIRONMENT

MDE

Martin O'Malley, Governor
Anthony G. Brown, Lt. Governor
Robert M. Summers, Secretary

1800 Washington Blvd.
Baltimore, MD 21230
410-537-3000
www.mde.state.md.us

This book is dedicated to the memory of our colleague and friend Richard Trickett (1955-2012) who will be remembered for his remarkable knowledge and tireless quest to improve sediment control in the State of Maryland.

ACKNOWLEDGEMENTS

The latest revisions to the Maryland Standards and Specifications for Soil Erosion and Sediment Control are a result of the effort of a Technical Workgroup that consists of members from the Maryland Soil Conservation Districts (MASCD), Natural Resources Conservation Service (NRCS), local Maryland governments, Maryland State Highway Administration (SHA), Maryland Environmental Services (MES), Maryland Department of the Environment (MDE), as well as everyone who submitted comments and suggestions. MDE secured the consulting services of Whitney Bailey Cox and Magnani, LLC (WBCM) and Michael Baker Engineering through MES to assist in the development of the draft document.

Many individuals assisted with the revision to this document by providing review comments, suggestions, sketches, drawings, and reference documents. We would like to acknowledge the following individuals for their invaluable contributions:

Allan Stahl (Natural Resources Conservation Service)
Jeff West (Baltimore County SCD)
Bryan Snyder (Carroll County SCD)
Fred Jones (Carroll County)
Chris Brown (Cecil County SCD)
Van Funk (Cecil County)
Bill Tharpe (Harford County)
Geof Schoming (Howard County SCD)
David Bourdon (Prince George's County SCD)
James Whisonant (Prince George's County SCD)
Lance Gardner (Prince George's County SCD)
David Kuykendall (Montgomery County)
Rick Brush (Montgomery County)
Bruce Young (St. Mary's County SCD)
Michael Wagner (Loiederman Soltesz Associates)
Craig Zinter (Talbot County SCD)
Dee Price (Washington County SCD)
Karuna Pujara (SHA)
Steve Buckley (SHA)
Dan Sajedi (SHA)
Austin Eckert (MDE)
Oluseun Omotoso (MDE)
Michael Gebreyesus (MDE)
Solomon Adamu (MDE)
James Tracy (MDE)
Amanda Malcolm (MDE)
Richard Trickett (MDE)
Maria Warburton (MDE)
Ken Pensyl (MDE)

The consultant project team members included the following individuals:

Brian Noll, Project Manager (WBCM)
James Kramperth (WBCM)
Jason Reinhardt (WBCM)
Mike Moore (WBCM)
Phil Carroll (WBCM)
Dennis Santeufemio (WBCM)
Melisa Keimig (WBCM)
Charlene Osborne (WBCM)
Saada Russell (WBCM)
Patty Kulishek (WBCM)
Tristram Madden (Michael Baker)
Vic Siaurusaitus (Michael Baker)
Kate Meade (MES)
Kerri Martin (MES)
Michael Herzberger (MES)

SUMMARY

The ***"2011 Maryland Standards and Specifications for Soil Erosion and Sediment Control"*** provides guidance for applicants, designers, plan reviewers, developers, contractors, and inspectors to control sediment-laden runoff from construction sites and ensure the protection of Maryland's streams, rivers, and the Atlantic Coastal and Chesapeake Bays.

The document consists of an introduction, a planning and design section, and seven sections of erosion and sediment control practices. Planning is an important element for today's site design measures, especially for meeting "Environmental Site Design (ESD) to the maximum extent practicable (MEP)." A brief description of each section is outlined below:

Introduction This section describes the purpose of the manual, impacts of sedimentation, and factors that influence soil erosion.

Section A ***Planning and Design***
This section includes the design and review process as it relates to ESD. It outlines design principles that should be applied throughout the process from planning through design, review, and inspection. A design methodology is presented with tools for selecting practices under certain conditions. An erosion and sediment control table (Table A-4) is provided as a quick reference summarizing the practices, their primary purpose, design criteria, and associated practices.

Section B ***Grading and Stabilization***
This section describes grading and stabilization requirements to minimize potential for erosion during construction. Proper utilization of these practices controls erosion at the source and assists in complying with ESD requirements.

Section C ***Water Conveyance***
Practices in this section are primarily used to convey water around the active construction area (clear-water diversions) or to a sediment control practice. The conveyance practices can be used to divide drainage areas into manageable segments. The practice is selected based on design criteria such as conveying clear-water versus sediment-laden water, slope, and drainage area.

Section D ***Erosion Control***
This section uses structural practices to reduce erosion from concentrated flow. Erosion control practices can be used for inflow or outlet protection, velocity checks in swales, or to convey water down a slope in non-erosive manner. The design of these practices is based on drainage area, flow rate, location, slope, and velocity.

Section E ***Filtering***
This section describes practices that filter and trap sediment for relatively small drainage areas. Many of these practices are used in sheet flow conditions and work with ESD principles. These are designed based on slope length and steepness of the upslope area. Other filtering practices trap and filter water in concentrated flow conditions.

Section F ***Dewatering***

Dewatering practices are used to remove the water from areas such as foundations for buildings and bridges, utilities, and sediment traps and basins while filtering sediment. Critical elements for dewatering practices are the location and clarity of the discharge.

Section G ***Sediment Trapping***

Sediment trapping practices are used to detain and settle sediment-laden runoff from larger drainage areas and include sediment traps and sediment basins. Sediment traps can be used for drainage areas up to 10 acres. A sediment basin that is to remain as a permanent structure requires an engineering design in accordance with Natural Resource Conservation Service (NRCS) Maryland Conservation Practice Standard Code No. 378 for Ponds. Also included are associated practices used with the design and construction of sediment traps and basins.

Section H ***Miscellaneous***

This section includes specifications for materials, subsurface drains, channels, temporary access waterway crossings, dust control, and onsite concrete washout structures.

Bibliography A list is provided of the reference material used to support the development and improvements to the Standards and Specifications.

Glossary Definitions of commonly used terms can be found in the Glossary.

2011 MARYLAND EROSION AND SEDIMENT CONTROL

DESIGN AND CONSTRUCTION MANUAL

TABLE OF CONTENTS

Acknowledgements.....i

Summary.....ii

Table of Contents.....TOC.1

Standard Symbols.....SS.1

INTRODUCTION

Purpose.....I.1

Sediment Damage.....I.1

Factors that Influence Soil Erosion.....I.1

Revising the Maryland Standards and Specifications.....I.3

SECTION A - PLANNING AND DESIGN

A-1 Environmental Site Design (ESD).....A.1

A-2 Design and Review Process.....A.2

A-3 Sediment Control Principles.....A.4

A-4 Design Methodology.....A.7

A-5 Erosion and Sediment Control Plan.....A.14

SECTION B - GRADING AND STABILIZATION

B-1 Stabilized Construction Entrance.....B.1

B-2 Wash Rack Option.....B.3

B-3 Land Grading.....B.5
- B-3-1 Benching.....B.7
- B-3-2 Serrated Slope.....B.8

B-4 Vegetative Stabilization.....B.9
- B-4-1 Incremental Stabilization.....B.10
- B-4-2 Soil Preparation, Topsoiling, and Soil Amendments.....B.12
- B-4-3 Seeding and Mulching.....B.15
- B-4-4 Temporary Stabilization.....B.18
- B-4-5 Permanent Stabilization.....B.21
- B-4-6 Soil Stabilization Matting.....B.36
- B-4-7 Heavy Use Area Protection.....B.42
- B-4-8 Stockpile Area.....B.43

SECTION C - WATER CONVEYANCE

C-1 Earth Dike C.1

C-2 Temporary Swale C.6

C-3 Perimeter Dike/Swale C.12

C-4 Temporary Storm Drain Diversion C.15

C-5 Temporary Asphalt Berm C.17

C-6 Clear Water Diversion Pipe C.19

C-7 Temporary Barrier Diversion C.21

C-8 Mountable Berm C.23

C-9 Diversion Fence C.25

SECTION D - EROSION CONTROL

D-1 Pipe Slope Drain D.1

D-2 Stone Check Dam D.5

D-3 Inflow Protection D.9
- D-3-1 Riprap Inflow Protection D.9
- D-3-2 Gabion Inflow Protection D.11

D-4 Outlet Protection D.13
- D-4-1 Rock Outlet Protection D.13
- D-4-2 Plunge Pool D.23

SECTION E - FILTERING

E-1 Silt Fence E.1

E-2 Silt Fence on Pavement E.4

E-3 Super Silt Fence E.6

E-4 Clear Water Pipe through Silt Fence or Super Silt Fence E.8

E-5 Filter Berm E.10

E-6 Filter Log E.13

E-7 Temporary Stone Outlet Structure E.17

E-8 Temporary Gabion Outlet Structure E.20

E-9 Storm Drain Inlet Protection E.23
E-9-1 Standard Inlet Protection E.24
E-9-2 At-Grade Inlet Protection E.26
E-9-3 Curb Inlet Protection E.27
E-9-4 Median Inlet Protection E.28
E-9-5 Median Sump Inlet Protection E.29
E-9-6 Combination Inlet Protection E.30
E-9-7 Gabion Inlet Protection E.32

SECTION F - DEWATERING

Dewatering Strategy F.1

F-1 Removable Pumping Station F.2

F-2 Sump Pit F.4

F-3 Portable Sediment Tank F.6

F-4 Filter Bag F.8

SECTION G - SEDIMENT TRAPPING

G-1 Sediment Traps G.1
G-1-1 Pipe Outlet Sediment Trap ST-I G.4
G-1-2 Stone/Riprap Outlet Sediment Trap ST-II G.9
G-1-3 Riprap Outlet Sediment Trap ST-III G.14

G-2 Sediment Basins G.19
G-2-1 Typical Anti-Seep Collars G.42
G-2-2 Corrugated Riser Base G.43
G-2-3 Concentric Trash Rack and Anti-Vortex Device G.44
G-2-4 Baffle Boards G.46
G-2-5 Types of Couplers for Corrugated Steel Pipe G.47
G-2-6 Sediment Basin Schematic Horizontal Draw Down Device G.48
G-2-7 Sediment Basin Schematic Vertical Draw Down Device G.49
G-2-8 Precast Riser Connector G.50
G-2-9 Projection Collar G.51

SECTION H - MISCELLANEOUS

H-1 Materials H.1

H-2 Subsurface Drains H.4

H-3 Channel H.10

H-4 Temporary Access Waterways Crossings H.14

H-4-1 Temporary Access Bridge H.16
H-4-2 Temporary Access Culvert H.19

H-5 Dust Control H.22
H-6 Onsite Concrete Washout Structure H.23

BIBLIOGRAPHY BB.1

GLOSSARY GL.1

LIST OF FIGURES

SECTION	FIGURE #	DESCRIPTION	PAGE
A	A.1	Design Process for New Development	A.2
B	B.1	Incremental Stabilization – Cut	B.10
B	B.2	Incremental Stabilization – Fill	B.11
B	B.3	U.S.D.A. Plant Hardiness Zones	B.19
D	D.1	Stone Check Dam Spacing and Height	D.7
D	D.2	Design of Outlet Protection – Minimum Tailwater Condition	D.18
D	D.3	Design of Outlet Protection – Maximum Tailwater Condition	D.19
G	G.1	Principal Spillway Design	G.31
G	G.2	Riser Inflow Curves	G.34
G	G.3	Emergency Spillway Design	G.35
G	G.4	Emergency Spillway	G.36
G	G.5	Anti-Seep Collar Design	G.38
G	G.6	Anti-Seep Collar Design Chart	G.40
H	H.1	Drain Chart – Corrugated Plastic Drain Tubing	H.7
H	H.2	Determining “n” for Riprap Lined Channel Using Depth of Flow	H.13

LIST OF TABLES

SECTION	TABLE#	DESCRIPTION	PAGE
A	A.1	Planning Principles	A.4
A	A.2	Recommended Buffer Width (feet) for Tier II Waters	A.5
A	A.3	Design Steps	A.7
A	A.4	Erosion and Sediment Control Practices Matrix	A.11
B	B.1	Temporary Seeding for Site Stabilization	B.20
B	B.2	Recommended Permanent Seeding Mixtures by Site Condition or Purpose	B.25
B	B.3	Selected List of Permanent Herbaceous Seeding Mixtures	B.26
B	B.4	Quality of Seed	B.33
B	B.5	Recommended Planting Dates for Permanent Cover in Maryland	B.34
B	B.6	Maintenance Fertilization for Permanent Seeding	B.35
B	B.7	Soil Stabilization on Slopes	B.37
C	C.1	Earth Dike Design Criteria	C.1
C	C.2	Earth Dike Selection	C.3
C	C.3	Temporary Swale Design Criteria	C.6
C	C.4	Temporary Swale Selection (4 Foot Flat Bottom)	C.8
C	C.5	Temporary Swale Selection (6 Foot Flat Bottom)	C.9
C	C.6	Clear Water Diversion Pipe Design Criteria	C.19
D	D.1	Pipe Slope Drain Design Criteria	D.2
D	D.2	Riprap Sizes and Thickness	D.14
E	E.1	Silt Fence Design Constraints	E.1
E	E.2	Silt Fence on Pavement Design Constraints	E.4
E	E.3	Super Silt Fence Design Constraints	E.6
E	E.4	Filter Berm Design Constraints	E.10
E	E.5	Filter Berm Design Criteria	E.10
E	E.6	Filter Log Design Constraints	E.13
E	E.7	Inlet Protection Drainage Area Limits	E.23
G	G.1	Sediment Trap Design Criteria	G.5
G	G.2	Pipe Outlet Diameter Selection (ST-I)	G.5
G	G.3	Stone/Riprap Outlet Sediment Trap Design Criteria (ST-II)	G.10
G	G.4	Riprap Outlet Sediment Trap (ST-III) Outlet Dimensions	G.14
G	G.5	Riprap Outlet Sediment Trap (ST-III) Design Criteria	G.15
G	G.6	Temporary Sediment Basin Design Data Sheet	G.26
G	G.7	Corrugated Metal Pipe Inlet Flow Chart	G.32
G	G.8	Reinforced Concrete Pipe Inlet Flow Chart	G.33
G	G.9	Design Data for Earth Spillways	G.37
G	G.10	Draw-Down Device Orifice Sizing	G.41
H	H.1	Geotextile Fabrics	H.1
H	H.2	Stone Size	H.2
H	H.3	Compost	H.3
H	H.4	Maximum Velocities for Lined Channels	H.10
H	H.5	Steepest Permissible Side Slopes and Minimum Lining Thickness	H.11

LIST OF DETAIL DRAWINGS

DETAIL	PRACTICE	PAGE
B-1	STABILIZED CONSTRUCTION ENTRANCE	B.2
B-2	WASH RACK OPTION	B.4
B-3	LAND GRADING	
	B-3-1 BENCHING	B.7
	B-3-2 SERRATED SLOPE	B.8
B-4	VEGETATIVE STABILIZATION	
	B-4-6 SOIL STABILIZATION MATTING	
	B-4-6-A TEMPORARY SOIL STABILIZATION MATTING CHANNEL APPLICATION	B.38
	B-4-6-B TEMPORARY SOIL STABILIZATION MATTING SLOPE APPLICATION	B.39
	B-4-6-C PERMANENT SOIL STABILIZATION MATTING CHANNEL APPLICATION	B.40
	B-4-6-D PERMANENT SOIL STABILIZATION MATTING SLOPE APPLICATION	B.41
C-1	EARTH DIKE	C.5
C-2	TEMPORARY SWALE	C.11
C-3	PERIMETER DIKE/SWALE	C.14
C-5	TEMPORARY ASPHALT BERM	C.18
C-6	CLEAR WATER DIVERSION PIPE	C.20
C-7	TEMPORARY BARRIER DIVERSION	C.22
C-8	MOUNTABLE BERM	C.24
C-9	DIVERSION FENCE	C.27
D-1	PIPE SLOPE DRAIN	D.3
D-2	STONE CHECK DAM	D.8
D-3	INFLOW PROTECTION	
	D-3-1 RIPRAP INFLOW PROTECTION	D.10
	D-3-2 GABION INFLOW PROTECTION	D.12
D-4	OUTLET PROTECTION	
	D-4-1-A ROCK OUTLET PROTECTION I	D.20
	D-4-1-B ROCK OUTLET PROTECTION II	D.21
	D-4-1-C ROCK OUTLET PROTECTION III	D.22
	D-4-2 PLUNGE POOL	D.25
E-1	SILT FENCE	E.2
E-2	SILT FENCE ON PAVEMENT	E.5
E-3	SUPER SILT FENCE	E.7
E-4	CLEAR WATER PIPE THROUGH SILT FENCE OR SUPER SILT FENCE	E.9
E-5	FILTER BERM	E.12
E-6	FILTER LOG	E.15
E-7	TEMPORARY STONE OUTLET STRUCTURE	E.18
E-8	TEMPORARY GABION OUTLET STRUCTURE	E.21

E-9 STORM DRAIN INLET PROTECTION
E-9-1 STANDARD INLET PROTECTION E.24
E-9-2 AT-GRADE INLET PROTECTION E.26
E-9-3 CURB INLET PROTECTION E.27
E-9-4 MEDIAN INLET PROTECTION E.28
E-9-5 MEDIAN SUMP INLET PROTECTION E.29
E-9-6 COMBINATION INLET PROTECTION E.30
E-9-7 GABION INLET PROTECTION E.32

F-1 REMOVABLE PUMPING STATION F.3
F-2 SUMP PIT F.5
F-3 PORTABLE SEDIMENT TANK F.7
F-4 FILTER BAG F.9

G-1 SEDIMENT TRAPS
G-1-1 PIPE OUTLET SEDIMENT TRAP ST-I G.6
G-1-2 STONE/RIPRAP OUTLET SEDIMENT TRAP ST-II G.11
G-1-3 RIPRAP OUTLET SEDIMENT TRAP ST-III G.16
G-2 SEDIMENT BASINS
G-2-1 TYPICAL ANTI-SEEP COLLARS G.42
G-2-2 CORRUGATED RISER BASE G.43
G-2-3 CONCENTRIC TRASH RACK AND ANTI-VORTEX DEVICE G.44
G-2-4 BAFFLE BOARDS G.46
G-2-5 TYPES OF COUPLERS FOR CORRUGATED STEEL PIPE G.47
G-2-6 SEDIMENT BASIN SCHEMATIC HORIZONTAL DRAW DOWN DEVICE G.48
G-2-7 SEDIMENT BASIN SCHEMATIC VERTICAL DRAW DOWN DEVICE G.49
G-2-8 PRECAST RISER CONNECTOR G.50
G-2-9 PROJECTION COLLAR G.51

H-2 SUBSURFACE DRAINS H.8
H-4 TEMPORARY ACCESS WATERWAYS CROSSINGS
H-4-1 TEMPORARY ACCESS BRIDGE H.17
H-4-2 TEMPORARY ACCESS CULVERT H.20
H-6 ONSITE CONCRETE WASHOUT STRUCTURE H.24

STANDARD SYMBOLS*	
AT–GRADE INLET PROTECTION	AGIP
BAFFLE BOARDS	BB
BENCHING	BENCHING
CLEAR WATER DIVERSION PIPE	CWD – 12 DESIGNATION CWD–12 REFERS TO 12 INCH CLEAR WATER DIVERSION.
CLEAR WATER PIPE	CWP
COMBINATION INLET PROTECTION	COIP
CONCRETE WASHOUT STRUCTURE	CWS
CURB INLET PROTECTION	CIP
DIVERSION FENCE	DF
EARTH DIKE	A–1 PLACE DESIGNATION (e.g. A–1) ON FLOW CHANNEL SIDE OF DIKE.
EMERGENCY SPILLWAY	ES
FILTER BAG	FB
FILTER BERM	FB–A FB–B

*NOTE: DEPICTION OF STANDARD SYMBOLS ON THE PLAN MUST CONSIDER THE FOOTPRINT REQUIRED FOR THE DEVICE.

STANDARD SYMBOLS*	
FILTER LOG	FL–18 DESIGNATION FL–18 REFERS TO 18 INCH DIAMETER FILTER LOG.
GABION INFLOW PROTECTION	GP
GABION INLET PROTECTION	GIP
HORIZONTAL DRAW–DOWN DEVICE	HDDD
LIMIT OF DISTURBANCE	LOD
MEDIAN INLET PROTECTION	MIP
MEDIAN SUMP INLET PROTECTION	MSIP
MOUNTABLE BERM	MB
PERIMETER DIKE/SWALE	PDS–1
PERMANENT SOIL STABILIZATION MATTING CHANNEL	PSSMC– lb/ft^2 (INCLUDE SHEAR STRESS)
PERMANENT SOIL STABILIZATION MATTING SLOPE	PSSMS– lb/ft^2 (INCLUDE SHEAR STRESS)
PIPE OUTLET SEDIMENT TRAP ST I	ST–I
PIPE SLOPE DRAIN	PSD – 12 DESIGNATION PSD–12 REFERS TO 12 IN PIPE SLOPE DRAIN.

*NOTE: DEPICTION OF STANDARD SYMBOLS ON THE PLAN MUST CONSIDER THE FOOTPRINT REQUIRED FOR THE DEVICE.

STANDARD SYMBOLS*	
PLUNGE POOL	PP
PORTABLE SEDIMENT TANK	PST
REMOVABLE PUMPING STATION	RPS
RIPRAP INFLOW PROTECTION	RRP
RIPRAP OUTLET SEDIMENT TRAP ST III	ST–III
ROCK OUTLET PROTECTION I	ROP1
ROCK OUTLET PROTECTION II	ROPII
ROCK OUTLET PROTECTION III	ROPIII
SILT FENCE	SF
SILT FENCE ON PAVEMENT	SFOP
STABILIZED CONSTRUCTION ENTRANCE	SCE
STANDARD INLET PROTECTION	SIP
STONE CHECK DAM	CD

*NOTE: DEPICTION OF STANDARD SYMBOLS ON THE PLAN MUST CONSIDER THE FOOTPRINT REQUIRED FOR THE DEVICE.

STANDARD SYMBOLS*	
STONE/RIPRAP OUTLET SEDIMENT TRAP ST II	ST–II
SUBSURFACE DRAINS	SSD
SUMP PIT	SP
SUPER SILT FENCE	SSF
TEMPORARY ACCESS BRIDGE	TB
TEMPORARY ACCESS CULVERT	TAC
TEMPORARY ASPHALT BERM	TAB
TEMPORARY BARRIER DIVERSION	TBD
TEMPORARY GABION OUTLET STRUCTURE	TGOS
TEMPORARY SOIL STABILIZATION MATTING CHANNEL	TSSMC– lb/ft² (INCLUDE SHEAR STRESS)
TEMPORARY SOIL STABILIZATION MATTING SLOPE	TSSMS– lb/ft² (INCLUDE SHEAR STRESS)
TEMPORARY STONE OUTLET STRUCTURE	TSOS
TEMPORARY SWALE	A–1

*NOTE: DEPICTION OF STANDARD SYMBOLS ON THE PLAN MUST CONSIDER THE FOOTPRINT REQUIRED FOR THE DEVICE.

STANDARD SYMBOLS*	
VERTICAL DRAW-DOWN DEVICE	VDDD
WASH RACK OPTION	WR

*NOTE: DEPICTION OF STANDARD SYMBOLS ON THE PLAN MUST CONSIDER THE FOOTPRINT REQUIRED FOR THE DEVICE.

INTRODUCTION

PURPOSE

The purpose of these Standards and Specifications for Soil Erosion and Sediment Control (Standards) is to establish minimum plan requirements and procedures to control the adverse impacts associated with soil erosion and sedimentation during construction. These Standards provide designers with a variety of measures to control sediment and stormwater related water quality problems caused by earth disturbance. These Standards are minimum criteria and must be incorporated into an overall approach for controlling runoff during construction.

Environmental planning at the start of the site development process improves the effectiveness of the erosion and sediment plan, often resulting in a less costly project. An effective strategy depends largely on the designer's ability to select appropriate controls that address the unique characteristics and problems posed by a specific site. Ultimately, the success of the strategy relies on proper implementation and maintenance of the erosion and sediment control and stormwater management plans. Preventing soil erosion and off-site sedimentation will reduce impacts from land-disturbing activities and assist in the overall attainment and maintenance of water quality standards.

SEDIMENT DAMAGE

Erosion on construction sites can be a significant source of sediment pollution to nearby streams. Excessive quantities of sediment cause costly damage to water resources and to private and public lands. Obstruction of stream channels and navigable rivers by sediment deposits reduces hydraulic capacity and increases flooding. Sediment deposits in drainage channels, culverts, and storm drainage systems result in frequent and costly maintenance. Municipal and industrial water supply reservoirs lose storage capacity. Navigable channels need to be dredged and, the cost of filtering and water purification increases.

The negative impact on aquatic organisms due to large influxes of sediment into waterways is substantial. The initial effect is a reduction in the number and density of benthic macroinvertebrates. Aquatic vegetation is often destroyed, either by burial or reduction of sunlight essential for growth. Many species of fish, dependent on bottom dwelling organisms for food or plant life for refuge, are threatened by the damaged habitat. The reduction of sunlight from suspended sediment can reduce oxygen levels in the water to a point where aquatic life cannot survive. The habitat destruction associated with rapid sedimentation severely impairs the ability of water resources to support commercially important finfish and shellfish populations.

Migratory waterfowl also depend on near-shore plant and shellfish communities as a food source during annual migration. The reduction of waterfowl has been associated, in part, with habitat destruction from sedimentation derived from development activity. Erosion and subsequent sedimentation of waterways also impacts recreational areas. The aesthetics and recreational value of streams, lakes and reservoirs used for swimming, boating, fishing and other water-related activities can be impaired from excessive sedimentation.

FACTORS THAT INFLUENCE SOIL EROSION

The inherent erodibility of soils must be evaluated when designing a plan. The erosion potential of any area is determined by four principal factors: the erodibility of the soils, vegetative cover, topography, and climate. Although the factors are interrelated, they are discussed separately for ease of understanding.

Soil Erodibility

The vulnerability of a soil to erosion is known as erodibility. Erodibility is influenced by soil particle size and gradation (texture), percentage of organic matter, and soil structure. Generally the most erodible soils contain high proportions of silt and very fine sand. The presence of clay or organic matter tends to decrease soil erodibility. Clays are sticky and tend to bind soil particles together, which along with

organic matter helps to maintain stable soil structure (aggregates).

Vegetative Cover

There are several ways in which vegetation protects soil from erosive forces of rainfall. Vegetation shields the soil surface from the impact of raindrops while the root mass holds soil particles in place. Vegetation filters sediment, slows the velocity of runoff, and helps maintain the infiltration capacity of a soil. Maintaining and establishing vegetation are the most important factors in combating erosion. The goal is to expose as small an area as possible for the shortest length of time. By minimizing the time and extent of soil exposure, the erosion potential is reduced.

Topography

Slope length and steepness are key influences on both the volume and velocity of surface runoff. Longer slopes deliver more runoff to the base of slopes, and steeper slopes increase runoff velocity; both conditions enhance the potential for erosion.

Climate

Erosion potential is also affected by the climate of an area. Rainfall characteristics (i.e. frequency, intensity, and duration) directly influence the amount of runoff generated. As the frequency of rainfall increases, water has less chance between storms to drain through the soil.

The soil will remain saturated for longer periods of time and stormwater runoff volume will be greater when rainfall events are more frequent, intense, or lengthy. Seasonal variation in temperature and rainfall defines periods of high erosion potential during the year. May through September is the period of the year when higher soil loss rates are most likely to occur in Maryland. Snow will not cause erosion as it falls, but when rapid melts occur, erosion may result.

Soil erosion and sedimentation can be reduced when soil, vegetative, topographic, and climatic factors are considered during the planning stage of development.

REVISING THE MARYLAND STANDARDS AND SPECIFICATIONS

These Standards establish the minimum requirements for individual practices used for erosion and sediment control in Maryland. On occasion, variations or new practices may be found to be effective for erosion and sediment control. Use of a new or revised practice requires that a detail and accompanying specifications be developed and submitted to the Maryland Department of the Environment, Water Management Administration (MDE/WMA).

A subcommittee consisting of Natural Resources Conservation Service, State Soil Conservation Committee, Soil Conservation Districts, local governments, and MDE technical personnel will review the proposed erosion and sediment control practice. If the proposed practice is approved by the technical subcommittee, an authorization will be issued by MDE/WMA. Once approved, the practice may be used routinely, based on its acceptance by the appropriate approval authority.

SECTION A – PLANNING AND DESIGN

A-1 ENVIRONMENTAL SITE DESIGN (ESD)

The Stormwater Management Act of 2007 (Act) defines Environmental Site Design (ESD) as "using small-scale stormwater management practices, nonstructural techniques, and site planning to mimic natural hydrologic runoff characteristics and minimize the impact of land development on water resources." ESD emphasizes conserving natural features, drainage patterns, and vegetation; minimizing impervious surfaces; slowing down runoff; and increasing infiltration. The changes necessary to implement the Act are significant and require consideration of runoff control from the start of the land development process.

As a result of the Act, the design and review of erosion and sediment control and stormwater management plans must be integrated. In addition, erosion and sediment control needs to be considered from the beginning planning stages. The definition of ESD, the modifications to the Code of Maryland Regulations (COMAR), and the procedures and practices presented herein will guide developers and designers in meeting Maryland's sediment and stormwater requirements.

A-2 DESIGN AND REVIEW PROCESS

Acceptable erosion and sediment control plans must be designed to mitigate soil erosion, prevent increases in stormwater runoff, and minimize the discharge of pollutants. The Act requires the establishment of a comprehensive process for the review and approval of erosion and sediment control and stormwater management plans. Planning for erosion and sediment control needs to start early and be integrated with stormwater management practices. A coordinated, comprehensive review process includes the submission and review of erosion and sediment control and stormwater management plans for each of the following three phases of plan development:

1. **CONCEPT PLAN**

2. **SITE DEVELOPMENT PLAN**

3. **FINAL PLAN**

This process is described in more detail in Chapter 5, Supplement #1, 2000 Maryland Stormwater Design Manual and outlined in Figure A.1 below.

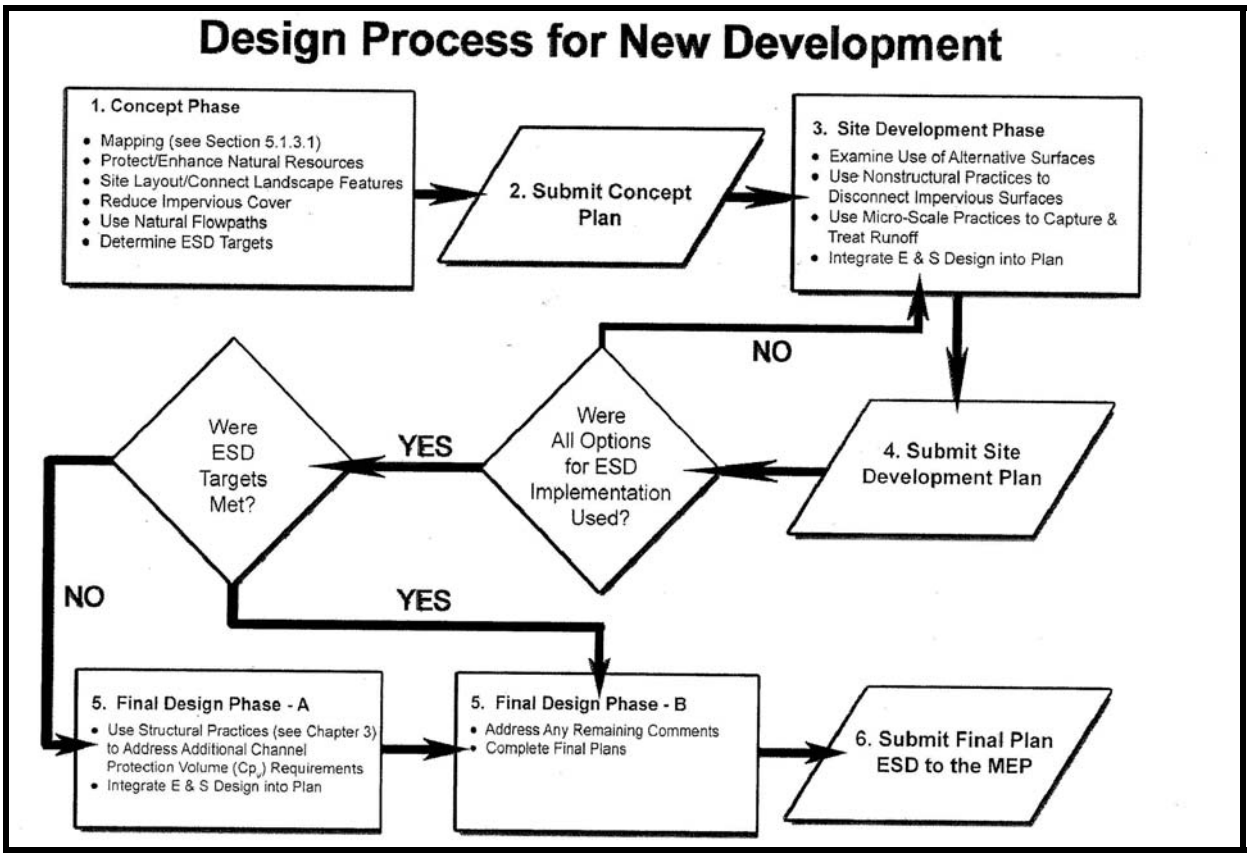

Figure A.1: Design Process for New Development
(Source: Chapter 5, Supplement #1, 2000 Maryland Stormwater Design Manual)

Concept Plan

Developing a plan begins with gathering, mapping, and analyzing information about the physical characteristics of the site. The proposed development site should be visited in order to clearly understand its topographic, vegetative, drainage, and soil characteristics. Relying exclusively on topographic maps, soils maps, and other materials found in the office without field verification is not an acceptable planning technique.

The topography of the site, mapped at suitable contour intervals, will allow the delineation of drainage areas, flow patterns, slopes, and natural resources such as wetlands, seeps, streams, forests, critical areas, and buffers. Downstream wetlands, lakes, streams, structures, Tier II waters, or other areas particularly sensitive to damage from erosion and sedimentation should also be investigated, mapped, and incorporated into the site design to afford these areas additional consideration. Investigating the site soil characteristics enables the designer to identify areas that should remain undisturbed.

The concept plan requires mapping of natural resources, vegetative buffer strips, highly erodible soils, and slopes 15 percent and steeper. These mapped areas are to be protected from erosion using additional measures or, wherever possible, designated to remain undisturbed. This data will serve as the foundation for developing the site development plan for both erosion and sediment control and stormwater management.

Site Development Plan

The site development plan establishes the footprint of the proposed project and identifies the impacts of the proposed impervious surfaces on the existing natural conditions. This will better protect natural resources and buffers and allow for using ESD practices throughout the site. Included in this step is a narrative describing how erosion and sediment control will be integrated into the stormwater management strategy using ESD in accordance with *The 2000 Maryland Stormwater Design Manual, Chapter 5, Supplement 1*. Also included is the preparation of detailed designs, computations, and grading plans for a comprehensive review and approval. An overlay plan showing stormwater and erosion and sediment control practices is required as part of the site development submittal. After approval from the approval authority, the applicant will then proceed with final plan preparation.

Final Plan

Final erosion and sediment control plans must include the limit of disturbance (LOD), the location of each sediment control practice, contours for sediment traps and sediment basins, associated construction notes, details, and representative cross-sections, as appropriate. Depiction of standard symbols on the plan needs to consider the footprint required for the device. Existing and proposed contours need to be shown at an appropriate interval. Drainage areas must be delineated for sediment control practices whose sizing is based on the drainage area, and, when necessary, design computations must be provided. When phasing is necessary, the sediment control plan must include initial, interim, and final phase sediment control practices, as appropriate. A sequence of construction must be provided with enough detail to guide the construction, maintenance, and removal of the erosion and sediment controls.

A-3 SEDIMENT CONTROL PRINCIPLES

The principles listed in Table A.1 should be followed in developing erosion and sediment control plans that prevent erosion, protect against downstream erosion, capture sediment on-site, and meet applicable requirements.

Table A.1: Planning Principles

No.	Planning Principle
1.	Plan the development to fit the site
2.	Protect and avoid natural resources
3.	Protect and avoid steep slopes and highly erodible soils
4.	Minimize disturbed areas
5.	Stabilize exposed soils as soon as practicable
6.	Control and/or manage on-site and off-site runoff
7.	Protect perimeter areas and retain sediment on-site
8.	Make provisions for inspecting and maintaining sediment controls

1. **Plan the development to fit the site**
   A primary goal of ESD is the conservation of natural features (e.g., drainage patterns, soil, vegetation) to the maximum extent practicable (MEP). Working with a site's natural features helps minimize the amount of clearing and grading. Using the existing contours as much as possible reduces cuts and fills. Fitting the development to the site often reduces the amount of cut and fill, the potential for erosion, the need for structural components, and the project cost.

2. **Protect and avoid natural resources**
   Disturbed areas adjacent to natural resources require special attention. During the concept plan stage, a site's natural resource areas, such as wetlands, springheads, floodplains and stream buffers, are to be mapped.

   Protecting natural resources includes avoidance and minimization. If avoidance is not feasible, every effort must be made to minimize impacts. Construction resulting in temporary impacts to natural resources may require enhanced management, such as accelerated stabilization, redundant erosion and sediment controls, and increased vegetative buffers.

   If a project is in Tier II waters or discharges to an impaired water body with a Total Maximum Daily Load (TMDL) allocation for sediment, an additional level of control(s) may be needed. This includes but is not limited to accelerated stabilization, redundant controls, increased buffers, passive or active chemical treatment, or a reduction in the size of the grading unit. To protect Tier II Watersheds, a minimum 100-foot buffer (or larger depending on site soils and slopes) is recommended for all perennial and intermittent streams. Buffers may also be required by other State regulations or local criteria (e.g., wetlands and waterways, forest conservation, and critical area). Riparian buffering recommendations (adapted from Johnson, C.W. and Buffer, S. 2008) are provided below.

Table A.2: Recommended Buffer Width

Recommended Buffer Width (feet) for Tier II Waters				
Hydrologic Soil Group	**Slope**			
	0-5%	**5-15%**	**15-25%**	**>25%**
A/B	100	130	160	190
C	120	150	180	210
D	140	170	200	230

1. **Protect and avoid steep slopes and highly erodible soils**

   Protection of steep slopes and highly erodible soils is imperative to reducing erosion. For the purposes of erosion and sediment control, steep slopes are defined as those with gradients of 20 percent or more (USDA NRCS Soil Survey Manual, October, 1993). Highly erodible soils are those soils with a slope greater than 15 percent or those soils with a soil erodibility factor K greater than 0.35 and with a slope greater than 5 percent. Certain projects (e.g. those located in the Chesapeake and Atlantic Coastal Bays Critical Area) may be subject to a more restrictive definition for steep slopes or highly erodible soils.

   When steep slopes or highly erodible soils are present, measures need to be taken to minimize impacts by limiting disturbance and providing additional protection. Examples of protection strategies for these areas include accelerated stabilization, soil stabilization matting, surface water diversion, and benching. While it may not be possible to eliminate earth disturbing activities on the basis of soil erodibility or slope alone, areas with both highly erodible soils and slopes equal to or greater than 25 percent should remain undisturbed and be protected during the construction process.

2. **Minimize disturbed areas**

   To reduce the potential for erosion, the extent and duration of soil exposure must be minimized. Phasing and sequencing may reduce the overall sediment control practice requirements. A well designed plan will include phases or stages of development that ensure only areas under active development are exposed. Grading is to be completed and stabilized as soon as possible after it is initiated.

   In order to realize these goals, the establishment of grading units may be required. As defined by regulations, a grading unit is the maximum contiguous area allowed to be graded at a given time and can be established on a site specific basis. Requiring adherence to a maximum disturbed area on a project will limit mass grading, improve phasing and sequencing, and encourage timely stabilization.

   If a project is to be sequenced to minimize mass grading and total disturbed area, grading activities should begin on one grading unit at a time. Work may proceed to a subsequent grading unit when at least 50 percent of the disturbed area in the preceding grading unit has been stabilized and approved by the enforcement authority. The approval authority may determine the size of each grading unit, and the overall cumulative earth disturbance at any one time during construction. Any activity pursuant to and in compliance with Title 15 Mines and Mining of the Environment Article or Title 9, Section 204 pursuant to sanitary landfills, as defined by COMAR 26.04.07.02(26) is exempt from the grading unit restriction.

3. **Stabilize exposed soils as soon as practicable**

   Earth disturbance must be stabilized as soon as possible and as dictated by the approved plan (e.g., seed and mulch, erosion control matting, rip rap, sod, pavement). At a minimum, all perimeter controls (e.g., earth berms, sediment traps) and slopes steeper than 3:1 require stabilization within three calendar days and all other disturbed areas within seven calendar days. Only areas under active grading, or on certain sites such as interior areas of surface mines and sanitary landfill cells, are exempt from these requirements. Accelerated stabilization may be required based on site characteristics or as specified by the approval authority. All stabilization requirements must be included on the erosion and sediment control plan.

6. **Control and/or manage on-site and off-site runoff**

Flows onto, through, and off of the site must be evaluated. Consideration needs to be given to the type of flow (sheet versus concentrated) and the slope, land use, and size of the contributory drainage area. Discharges and velocities, as well as the volume of flow through and discharging from the site, need to be controlled to minimize soil erosion.

Most sediment controls practices are sized for the drainage area discharging to the control. This includes off-site as well as on-site runoff, from undisturbed as well as disturbed areas. Reducing the drainage area by diverting clear water flow around a construction site is an effective approach.

7. **Protect perimeter areas and retain sediment on-site**

Sediment controls are the last line of defense on a construction site. Prior to any clearing and grubbing, the limits of disturbance must be clearly marked in the field. This will help to ensure that no construction takes place outside the approved limits of disturbance and that buffers and streams are protected. Sediment can be retained on-site by trapping, filtering, or a combination thereof. Selection of controls requires that consideration be given to drainage areas, site limitations, and effectiveness of individual practices.

8. **Make provisions for inspecting and maintaining sediment controls**

Good planning and design is futile without proper implementation of the erosion and sediment control plan. Erosion and sediment controls are ineffective without proper installation and maintenance. Thorough, periodic maintenance checks of erosion and sediment control measures are necessary to ensure effective control. Although enforcement is beyond the control of the designer and reviewer, the plans and specifications need to be clear and concise to establish a foundation for effective enforcement. The owner/developer is responsible for conducting routine inspections and required maintenance. At a minimum, the site and all controls should be inspected weekly and the next day after each rain event. However, the approval authority may require more frequent inspections, especially adjacent to sensitive areas or in impaired watersheds. A written inspection report is part of every inspection and should include:

- Inspection date
- Inspection type (routine, pre-storm event, post-storm event, during rain event)
- Name and title of inspector
- Weather information (current conditions as well as time and amount of last recorded precipitation)
- Brief description of project's status (e.g., percent complete) and/or current activities
- Evidence of sediment discharges
- Identification of plan deficiencies
- Identification of sediment controls that require maintenance
- Identification of missing or improperly installed sediment controls
- Compliance status regarding the sequence of construction and stabilization requirements
- Photographs
- Monitoring/sampling
- Maintenance and/or corrective action performed
- Or inspection items as required by the General Permit for Stormwater Associated with Construction Activities

The appropriate enforcement authority must be notified at the following stages of construction:

- Pre-construction meeting;
- After installation of sediment controls for each phase; and
- After permanent stabilization and prior to removal of sediment controls.

Any major modification of the approved plan requires approval from the appropriate authority. Minor modifications may be made in the field if approved by the inspector and documented in a field inspection report.

A-4 DESIGN METHODOLOGY

The design of erosion and sediment control needs to be integrated with the stormwater management plan. Table A.3 outlines the steps necessary for an erosion and sediment control plan to achieve ESD to the MEP. A more detailed description of each step follows the table.

Table A.3: Design Steps

No.	Design Step
1.	Identify existing drainage patterns, drainage area boundaries, and slopes (concept plan)
2.	Identify areas of special concern (concept plan)
3.	Fingerprint site and layout development (concept and site development plans)
4.	Determine phasing requirements and select initial erosion and sediment controls (site development and final plans)
5.	Identify interim drainage patterns, drainage area boundaries, and slopes; and select interim controls (site development and final plans)
6.	Identify proposed drainage patterns, drainage area boundaries, and slopes; and select final controls (site development and final plans)
7.	Prepare the sequence(s) of construction (site development and final plans)

1. **Identify existing drainage patterns, drainage area boundaries, and slopes**
   Current drainage information for the project site as well as off-site needs to be obtained and verified through a site visit or survey. Field check drainage patterns, drainage boundaries, vegetation, and land use. Look for existing storm drains, culverts, underground utilities, and other drainage features. Evaluate flow onto, through, and off of the site for existing conditions. Examine drainage areas to determine the size, slope, slope length, flow path, and, for areas with concentrated flow, the discharge. Decide if off-site flow can be diverted through or around the site. Using ESD principles, maintain or mimic the existing drainage patterns that give preference to sheet flow and small drainage areas.

2. **Identify areas of special concern**
   Areas of particular environmental concern, such as wetlands, streams, buffers, wooded areas, slopes 15 percent and steeper, and highly erodible soils, need to be identified within both the project site and adjacent areas and shown on the plan. Other considerations include the Chesapeake and Atlantic Coastal Bays Critical Area; National Wetland Inventory; natural heritage areas; rare, threatened, and endangered species habitat; Tier II watersheds (see Tier II buffer recommendations in Table A.2); and impaired stream segments with a TMDL for sediment.

   Areas of special concern must be verified with a site visit. Note any erosion, lack of vegetation, drainage problems, and other features that may be pertinent to the design. If an unmapped resource is found, contact the appropriate authority to determine additional regulatory requirements.

3. **Fingerprint site and layout development**

The initial assessment of the layout needs to be based on existing site features and proposed construction, striving to minimize the project's footprint and the encroachment on natural resources in accordance with stormwater ESD principles. A comprehensive approach to developing the erosion and sediment control and stormwater management plans will allow the natural hydrology to be maintained. Additionally, expansion of forest, wetland, and stream buffers (e.g., Atlantic Coast and Chesapeake Bay Critical Area Act, Nontidal Wetlands Act, Forest Conservation Act, local requirements) needs to be evaluated for enhanced sediment control.

4. **Determine phasing requirements and select initial erosion and sediment controls**

Depending on the scope of a project, phasing of sediment control and grading may be necessary (e.g., initial, interim, and final phase). Initial controls need to consider existing topography, drainage areas, ground cover, and access throughout the site. If possible, sediment controls installed during the initial phase should be designed to function for all phases of the project. The best designs incorporate careful phasing and sequencing into the overall erosion and sediment control plan and construction strategy.

In choosing erosion and sediment controls, consider possible locations for staging and stockpile areas and access or haul roads. If staging/stockpile areas are within the project's LOD, the proposed perimeter controls may suffice. However, if a soil stockpile creates a longer slope length or steeper slope, perimeter controls must be adjusted accordingly. Additionally, an access road may be required down a slope thereby concentrating flow that was previously sheet flow. Considerations must be made for handling this concentrated flow and stabilizing and maintaining the access road.

The design and installation of erosion and sediment control practices must not impact areas identified for ESD purposes. For example, compacting soils in areas designated for infiltration or removing trees or other vegetation identified for stormwater management is not permissible.

Table A.4 identifies various erosion and sediment control practices. It lists the primary purpose of each practice along with design criteria and associated practices. For example, earth dikes are listed as an associated practice for a Temporary Stone Outlet Structure (TSOS) because earth dikes are often required to direct flow toward a TSOS. Each application needs to be evaluated on a case-by-case basis.

Example 1 – Conveyance of clear water around a site

There are a number of practices that may be used to convey clear water. For example, a project includes an offsite drainage area of 2 acres, which needs to be conveyed around the site. The slope along the perimeter is 4 percent. Referring to Table A.4, the most likely choices are an earth dike, temporary swale, or diversion fence. The final choice may be dependent on the amount of right-of-way available to construct the practice, construction time line, or the selection of other sediment controls.

For example, if space is limited or trees need to be saved, a diversion fence might be the best choice. However, if the area is readily accessible and relatively clear, then an earth dike might be the better option. Outlet protection may also be required.

Example 2 – Sediment trap or basin as an initial control

Both the existing and proposed site conditions need to be considered when designing and locating sediment controls. For example, a sediment trap or basin should not be located in an area where a stormwater infiltration practice is proposed. Ideally, locate the trap or basin in an area where it can be kept in place for the longest period of time, taking into consideration the phasing and location of site improvements.

The sequencing of a site must take into account the time and access needed to install the initial sediment controls. If earth dikes and a sediment basin are designed as the initial controls, these must be completed before beginning other grading. This could require stockpiling the excavated material from the basin rather than using it immediately for fill on the site. Sequencing is also important to ensure that the basin is completed prior to the construction of the berms. Additional sediment controls may be required if extensive clearing is needed to reach the proposed basin location.

Example 3 – Concentrated flow

A 1.2 acre project site is located at the bottom of a 5 acre drainage area. The clear water runoff from the 3.8 acres off-site area is going to be diverted around the project site. Because of site constraints, the flow leaving the site will be concentrated. Referring to Table A.4, the potential practices include storm drain inlet protection, sediment traps, sediment basins, temporary stone outlet structures, and temporary gabion outlet structures (TGOS). The table indicates that silt fence, super silt fence, filter berms, and similar practices are not acceptable since these are limited to sheet flow. Because the drainage area is greater than an acre, selection is limited to two practices: a sediment trap or a TGOS.

5. **Identify interim drainage patterns, drainage area boundaries, and slopes; and select interim controls**

Interim conditions are often overlooked yet are important considerations for erosion and sediment control design. Typically, evaluating interim conditions is more difficult than evaluating initial phase or final phase. Project plans always include existing and proposed site conditions. Unlike the initial or final phases, interim conditions are not definitive; they represent the in-between. Due to shifts in drainage areas and changes in slope, drainage patterns for an interim phase may be entirely different from initial or final phase, and therefore the sediment controls may also need to be different. To select interim controls, apply the same procedures used to select initial phase sediment controls. Initial and final phase controls may need to be adjusted or modified to better correlate with the interim phase controls. Depending on the scope of the project, an interim phase sediment control plan may not be required.

Example 4 – Interim changes in drainage and slope

A subdivision is being constructed and will require various amounts of cut and fill to accommodate roadway and public sewer installation. Initial clearing, grubbing, and perimeter control installation have occurred. For the most part, sheet flow has been maintained during the rough grading stage. However, as roads are established and lots brought to grade, both drainage area and flow regimes (e.g., sheet flow to concentrated flow) have changed. Therefore, perimeter controls that accommodate concentrated flows (e.g., dikes and swales) would be more appropriate than those that are used for sheet flow conditions (e.g., silt fence or super silt fence). Similarly, the designer needs to consider the design and construction constraints for individual controls. Additionally, the vertical transition resulting from grade changes and slope increases from the roadway fills needs to be addressed. As fill progresses, runoff may need to be conveyed safely from the top of the slope to the bottom using pipe slope drains. Consideration also has to be given to the conveyance of this runoff to a sediment trapping practice.

6. **Identify proposed drainage patterns, drainage area boundaries, and slopes; and select final controls**

Follow the same procedures used to select initial phase sediment controls. Initial and interim phase controls may need to be adjusted or modified to better correlate with the final phase plans. As construction progresses, consider impacts to staging and stockpile areas and access roads. Also, consideration needs to be given to how the controls selected for final phase will be removed.

Example 5 – Final phase plan

Construction of a 14 acre housing development is initially controlled by three sediment traps and associated earth dike. Off-site drainage is not an issue. As roads are installed and house lots brought to grade, some of the disturbed area will no longer be conveyed to the traps, necessitating the design

of additional controls and/or a revised plan. The plans must be sequenced to ensure that these controls are installed before or as the drainage patterns change. As yards are graded, super silt fence may be needed along the perimeter of some of the house lots. Temporary diversions may be required to stay within the maximum drainage area allowed to a particular control. Considering all phases of a project, including the location of sediment controls placed on buildable lots, during the initial erosion and sediment control design enables the development of the most efficient plan.

7. <u>Prepare the sequence(s) of construction</u>

The sequence of construction describes how the plan will progress. It directs the installation and removal of the different erosion and sediment controls shown on the plan. Sequencing of the project needs to be considered throughout the entire design process. When writing a sequence of construction, consider whether additional instructions will be helpful to ensure that the controls function as intended.

Writing a sequence of construction requires visualizing the progression and connection of various site development activities (e.g., clearing, grubbing, grading, utility installation, maintenance of traffic, drainage systems, building systems, road systems, stream diversions, erosion and sediment control, stormwater management, etc.) to ensure that the erosion and sediment control practices will be installed and removed at the proper times, and function properly. Depending on the project's complexity, the sequence can be relatively simple or it can involve many small steps. Multiple steps can occur concurrently, while others must be sequential. Narratives are helpful in allowing reviewers, contractors, and inspectors to understand why a certain sediment control was selected or why following the sequence is imperative to the proper progression of the construction and erosion control effectiveness.

The sequence of construction, at a minimum, must include the following:

- Request for a pre-construction meeting with the appropriate enforcement authority;
- Clearing and grubbing as necessary for the installation of perimeter controls;
- Construction and stabilization of perimeter controls;
- Remaining clearing and grubbing within installed perimeter controls;
- Road grading;
- Grading for the remainder of the site;
- Utility installation and connections to existing structures;
- Construction of buildings, roads, and other construction;
- Final grading, landscaping, and stabilization;
- Installation of stormwater management measures;
- Approval of the appropriate enforcement authority prior to removal of sediment controls; and
- Removal of controls and stabilization of areas that are disturbed by removal of sediment controls.

Most sequences of construction will be more detailed, especially for plans requiring a stream diversion or the coordination between the removal of controls in one phase and the installation of different controls in a subsequent phase. If traffic control is a factor, then the erosion and sediment control plan should coordinate with the maintenance of traffic plan. For subdivision projects, the sequence of construction must identify lots having sediment control practices that preclude the lot from being developed until the contributing drainage area has been final graded and stabilized. Each project is unique and the level of detail in the sequence of construction needs to be tailored to each specific project.

Table A.4: Erosion and Sediment Control Practices Matrix

Practice	Primary Purpose	Design Criteria	Associated Practices	Remarks
Stabilized Construction Entrance	Stabilize surface	Access points	Gravel Berm, Silt Fence, Super Silt Fence	All ingress/egress points
Stabilized Construction Entrance with Wash Rack	Stabilize surface; prevent tracking of mud	Access points	Sediment Traps, Gravel Berm, Silt Fence, Super Silt Fence	All ingress/egress points
Serrated Slopes	Stabilize extreme grade changes	Site specific	Temporary and Permanent Stabilization	Divert overland flow from top of slope
Benching	Minimize erosion	20 ft cut/fill- 2:1 slopes 30 ft cut/fill- 3:1 slopes 40 ft cut/fill- 4:1 slopes	Temporary and Permanent Stabilization, Pipe Slope Drain	Can apply to stockpiles
Temporary Stabilization	Stabilize soil	Site specific	Soil Stabilization Matting	Maximum six month duration, soil testing
Permanent Stabilization	Stabilize soil	Site specific	Soil Stabilization Matting	Soil testing
Soil Stabilization Matting	Stabilize soil	Slope, slope length, soil erodibility, velocity	Temporary and Permanent Stabilization	
Heavy Use Area Protection	Stabilize surface	Construction routes, staging and material storage areas	Dust Control, Stabilized Construction Entrance	
Stockpile Area	Store earth	Site specific	Stabilized Construction Entrance, Silt Fence, Super Silt Fence, TSOS, Earth Dikes, Outlet Protection	
Earth Dike	Convey runoff	Drainage area ≤ 10 ac; slope ≤ 10%	Sediment Trap, TSOS, TGOS, Outlet Protection	Engineering design if > 10 ac or slope > 10%.
Temporary Swale	Convey runoff	Drainage area ≤ 10 ac; slope ≤ 10%	Sediment Trap, TSOS, TGOS; Outlet Protection	Engineering design if > 10 ac or slope > 10%.
Perimeter Dike/ Swale	Convey runoff	Drainage area ≤ 2 ac; slope ≤ 10%	Sediment Trap, Temporary Stabilization	Smaller footprint than earth dike and temporary swale
Temporary Storm Drain Diversion	Convey runoff	Site specific	Sediment Trap or Basin, Outlet Protection,	
Temporary Asphalt Berm	Convey runoff on paved areas	Site specific	Earth Dikes, TSOS, TGOS, Outlet Protection	

Table A.4: Erosion and Sediment Control Practices Matrix (Continued)

Clear Water Diversion Pipe	Convey concentrated flow around construction area	Design storm = Q_2; 1 ft freeboard at inlet	Dewatering Practices, Outlet Protection	Possible review by Wetlands and Waterways Program
Temporary Barrier Diversion	Convey runoff around construction	Design storm = Q_2; 1 ft freeboard at inlet	Dewatering Practices; Outlet Protection	
Mountable Berm	Convey runoff	Side slopes ≤ 5:1; minimum height 18 in.	Earth Dike	
Diversion Fence	Convey runoff	Drainage area ≤ 2 ac	Sediment Trap, Earth Dike, TSOS, TGOS, Outlet Protection	Smaller footprint than other diversions; may not be applicable in areas with bedrock
Pipe Slope Drain	Convey runoff down slopes	Drainage area ≤ 5 ac	Earth Dike, Rock Outlet Protection, Sediment Traps, TSOS, TGOS	Typically used for cut/fill slopes
Stone Check Dam	Minimize erosion, reduce velocities	Velocity > 4 fps	Soil Stabilization Matting, Sediment Trap, TSOS, TGOS	Velocity check, not a sediment control
Riprap Inflow Protection	Convey runoff non-erosively	Inflow slopes between 4:1 and 10:1	Sediment Traps/Basins, Temporary Swales, Earth Dike	
Gabion Inflow Protection	Convey runoff non-erosively	Inflow slopes steeper than 4:1	Sediment Traps/Basins, Temporary Swales, Earth Dike	
Rock Outlet Protection and Plunge Pools	Prevent erosion at outlets	Site specific	Earth Dikes, Temporary Swales, Sediment Basins, Sediment Traps, PSD, Clear Water Diversion Pipe	Points of concentrated discharge with erosive velocities
Silt Fence	Filter and retain sediment	Sheet flow from 5:1 slopes or flatter	Filter Berms/Logs, Super Silt Fence, Stabilized Construction Entrance	
Silt Fence on Pavement	Filter and retain sediment	Sheet flow from 3:1 slopes or flatter	Silt Fence, Super Silt Fence	Used on pavement
Super Silt Fence	Filter and retain sediment	Sheet flow from 2:1 slopes or flatter	Filter Berms/Logs, Silt Fence, Stabilized Construction Entrance	
Clear Water Pipe through Silt Fence/Super Silt Fence	Convey clear-water runoff through SF/SSF	Site specific	Silt Fence, Super Silt Fence, Pipe Slope Drain	
Filter Berm	Filter and retain sediment	Sheet flow	Silt Fence, Super Silt Fence, Stabilized Construction Entrance	Used where penetration of the ground is not desirable
Filter Log	Filter and retain sediment	Sheet flow from 2:1 slopes or flatter	Silt Fence, Super Silt Fence, Stabilized Construction Entrance	

Table A.4: Erosion and Sediment Control Practices Matrix (Continued)

Temporary Stone Outlet Structure	Filter and retain sediment	Drainage area ≤ 0.5 ac	Earth Dike	
Temporary Gabion Outlet Structure	Filter and retain sediment	Drainage area ≤ 1.5 ac	Earth Dike	
Storm Drain Inlet Protection	Filter and retain sediment	Inlet specific		
Removable Pumping Station	Dewatering	Site specific	Sediment Trap/Basin	Discharge to stable conveyance
Sump Pit	Dewatering	Site specific	Sediment Trap/Basin	Discharge to stable conveyance
Portable Sediment Tank	Dewatering	Storage = 1 ft^3/gpm of pumping capacity	Sediment Trap/Basin	Discharge to stable conveyance
Filter Bag	Dewatering	Site specific	Sediment Trap/Basin	Discharge to stable conveyance
Pipe Outlet Sediment Trap	Trap sediment	Drainage area ≤ 5 ac	Inflow Protection, Earth Dike, Temporary Swale, Outlet Protection	
Stone/Riprap Outlet Sediment Trap	Trap sediment	Drainage area ≤ 10 ac	Inflow Protection, Earth Dike, Temporary Swale, Outlet Protection	
Riprap Outlet Sediment Trap	Trap sediment	Drainage area ≤ 10 ac	Inflow Protection, Earth Dike, Temporary Swale, Outlet Protection	
Sediment Basin	Trap sediment	Drainage area ≤ 100 ac	Inflow Protection, Earth Dike, Temporary Swale, Outlet Protection	
Subsurface Drains	Convey groundwater	Site specific	Sediment Trap/Basin, Soil Stabilization Matting, Outlet Protection	
Channels	Convey flow	Site specific	Outlet Protection	
Temporary Access Bridge	Cross waterway	At or above stream bank		Preferred crossing, stabilized access road
Temporary Access Culvert	Cross waterway	Time-of-year restrictions		Stabilized access road
Dust Control	Minimize sediment transport	Access points, construction roads	Temporary and Permanent Stabilization, Heavy Use Area Protection	
Concrete Washout Structure	Contain wash water	4 inches of freeboard	Stabilized Construction Entrance	

A-5 EROSION AND SEDIMENT CONTROL PLAN

The "Stormwater Management Act of 2007" and COMAR 26.17.02 regulations require concept, site development, and final plans. It is essential that the erosion and sediment control plan be integrated with the stormwater management plan to address these different stages of plan development and attain effective resource protection. The key component of the concept phase from the erosion and sediment control perspective is identifying highly erodible soils and steep slopes. For the site development and final plans, specific erosion and sediment control practices will be detailed.

I. Content of the Erosion and Sediment Control Plan

Applicants are responsible for submitting an erosion and sediment control plan that meets the requirements established by these Standards. The plan must include sufficient information to evaluate the site conditions, environmental characteristics of the affected areas, potential impacts of the proposed grading on water resources, and effectiveness and acceptability of measures proposed to prevent soil erosion and off-site sedimentation.

Applicants shall submit the following information, at a minimum:

A. A letter of transmittal and/or application;

B. Name, address, and telephone number of:
   1. The owner of the property where the grading is proposed;
   2. The developer; and
   3. The applicant;

C. A vicinity map indicating north arrow, scale, site location, and other information necessary to easily locate the property;

D. Drainage area map(s) at a 1" = 200' minimum scale showing existing, interim, and proposed topography, proposed improvements, standard symbols for proposed sediment control features, and pertinent drainage information including provisions to protect downstream areas from erosion for a minimum of 200 feet downstream or to the next conveyance system;

E. The location of natural resources, wetlands, floodplains, highly erodible soils, slopes 15 percent and steeper, and any other sensitive areas required on a concept plan;

F. A general description of the predominant soil types on the site, as described by the appropriate soil survey information available through the local soil conservation district or the USDA Natural Resources Soil Conservation Service;

G. Proposed stormwater management practices;

H. Erosion and sediment control plans (site development and final) including:

   1. The existing topography and improvements as well as proposed topography and improvements at a scale between 1" = 10' and 1" = 50' with 2 foot contours or other approved contour interval. For projects with more than minor grading, interim contours may also be required;

   2. Scale, project and sheet title, and north arrow on each plan sheet;

3. The limit of disturbance (LOD) including:
    a. Limit of grading (grading units, if applicable), and
    b. Initial, interim, and final phases;

4. The proposed grading and earth disturbance including:
    a. Total disturbed area,
    b. Volume of cut and fill quantities, and
    c. Volume of borrow and spoil quantities;

5. Storm drainage features, including:
    a. Existing and proposed bridges, storm drains, culverts, outfalls, etc.,
    b. Velocities (v_2 and v_{10}) and flow rates (Q_2 and Q_{10}) at outfalls, and
    c. Site conditions around points of all surface water discharge from the site;

6. Erosion and sediment control practices to minimize on-site erosion and prevent off-site sedimentation including:
    a. The salvage and reuse of topsoil,
    b. Phased construction and implementation of grading unit(s) to minimize disturbances, both in extent and duration,
    c. Location and type of all proposed sediment control practices,
    d. Design details and data for all erosion and sediment control practices, and
    e. Specifications for temporary and permanent stabilization measures including, at a minimum:
        i. The following "Standard Stabilization Note" on the plan;

Standard Stabilization Note
Following initial soil disturbance or re-disturbance, permanent or temporary stabilization must be completed within: a.) Three (3) calendar days as to the surface of all perimeter dikes, swales, ditches, perimeter slopes, and all slopes steeper than 3 horizontal to 1 vertical (3:1); and b.) Seven (7) calendar days as to all other disturbed or graded areas on the project site not under active grading.

        ii. Details for areas requiring accelerated stabilization;
        iii. Maintenance requirements as defined in these Standards;
        iv. Identification of interior areas of surface mines exempted from stabilization requirements to prevent contamination of the recoverable resource by the stabilization material;

7. A sequence of construction describing the relationship between the implementation and maintenance of controls, including permanent and temporary stabilization, and the various stages or phases of earth disturbance and construction. The sequence of construction, at a minimum, must include the following:

    a. Request for a pre-construction meeting with the appropriate enforcement authority;
    b. Clearing and grubbing as necessary for the installation of perimeter controls;
    c. Construction and stabilization of perimeter controls;

d. Remaining clearing and grubbing within installed perimeter controls;
e. Road grading;
f. Grading for the remainder of the site;
g. Utility installation and connections to existing structures;
h. Construction of buildings, roads, and other construction;
i. Final grading, landscaping, and stabilization;
j. Installation of stormwater management measures;
k. Approval of the appropriate enforcement authority prior to removal of sediment controls; and
l. Removal of controls and stabilization of areas that are disturbed by removal of sediment controls.

Note: Any changes or revisions to the sequence of construction must be reviewed and approved by the plan approval authority prior to proceeding with construction.

8. A statement requiring the owner/developer or representative to contact the appropriate enforcement authority or its agent at the following stages of the project or in accordance with the approved erosion and sediment control plan, grading permit, or building permit:
   a. Prior to the start of earth disturbance,
   b. Upon completion of the installation of perimeter erosion and sediment controls, but before proceeding with any other earth disturbance or grading,
   c. Prior to the start of another phase of construction or opening of another grading unit,
   d. Prior to the removal of sediment control practices;

9. Certification by the owner or developer that any clearing, grading, construction, or development will be done pursuant to the approved erosion and sediment control plan, including inspecting and maintaining controls, and that the responsible personnel involved in the construction project will have a Certificate of Training at a Maryland Department of the Environment (MDE) approved training program for the control of erosion and sediment prior to beginning the project. Additionally, the owner or developer shall certify right of entry for periodic on-site evaluation by the appropriate enforcement authority and/or MDE;

10. If required by the appropriate approval authority or MDE, certification by a professional engineer, land surveyor, landscape architect, architect, or forester (for forest harvest operations only) registered in the State that the plans have been designed in accordance with erosion and sediment control laws, regulations, and standards.

I. Any additional information or data deemed appropriate by the approval authority.

II. <u>Approvals</u>

Approved plans are required prior to commencing with earth disturbance.

A. Approval Requirements. An erosion and sediment control plan may be approved by the appropriate approval authority once all requirements of these Standards have been met.

B. Approval Conditions. In granting the plan approval, the approval authority may impose additional conditions and criteria as deemed necessary to ensure compliance with the provisions of these Standards and the preservation of the State's natural assets, resources, public health, and safety. Generally, additional controls will be required in environmentally sensitive areas, areas with highly erodible soils, or other facilities that require protection.

C. Suspension or Revocation. Any erosion and sediment control approval issued may be suspended or revoked after written notice is given for any of the following reasons or as determined by the appropriate approval authority:

1. Terms or conditions of the approved erosion and sediment control plans were violated;

2. Violation notice(s) or stop work order(s) were ignored;

3. Site characteristics upon which plan approval was based were changed; or

4. Construction standards as required by the approved plan were disregarded.

D. Modification of Approved Erosion and Sediment Control Plans. Modifications of an approved erosion and sediment control plan must be made in accordance with the erosion and sediment control criteria contained in these Standards and/or as directed by the enforcement authority. A written statement explaining the change(s), all revised plan sheets, and any necessary revisions to the report must be provided.

SECTION B – GRADING AND STABILIZATION

B-1 STANDARDS AND SPECIFICATIONS

FOR

STABILIZED CONSTRUCTION ENTRANCE

Definition

A layer of aggregate that is underlain with nonwoven geotextile at points of ingress and egress of the construction site.

Purpose

To reduce tracking of sediment onto roadways and provide a stable area for entrance to or exit from the construction site.

Conditions Where Practice Applies

Stabilized construction entrances must be located at all points of construction ingress and egress.

Design Criteria

1. Where possible, locate the stabilized construction entrances at the high side of the project area.

2. For single family residential lots, locate the entrance at the permanent driveway.

3. Stabilized construction entrances cannot be installed over pavement.

4. Minimum length is 50 feet (30 feet for single family residential lots).

5. Minimum width is 10 feet. Flare entrance 10 feet minimum at the existing road to provide a turning radius.

6. The orientation of the stabilized construction entrance may vary from a straight line to a curve or "T" shape depending on the topography and right-of-way.

7. All surface water flowing to or diverted toward the stabilized construction entrance (SCE) must be piped under the entrance. Size the pipe to convey the runoff generated by the 2-year, 24-hour frequency storm at minimum. The minimum permissible pipe size is 6 inches. When the entrance is located at a high spot and has no drainage to convey, a pipe is not necessary.

Maintenance

The SCE must be maintained in a condition that minimizes tracking of sediment. This may require adding stone or making other repairs as conditions demand to maintain a clean surface, the mountable berm, and the specified dimensions. All stone or sediment spilled, dropped, or tracked onto the adjacent roadway must be removed immediately by vacuuming, scraping, and/or sweeping. Washing the roadway to remove mud tracked onto pavement is not acceptable unless the wash water is directed to an approved sediment control practice.

DETAIL B-1 STABILIZED CONSTRUCTION ENTRANCE

STANDARD SYMBOL

SCE

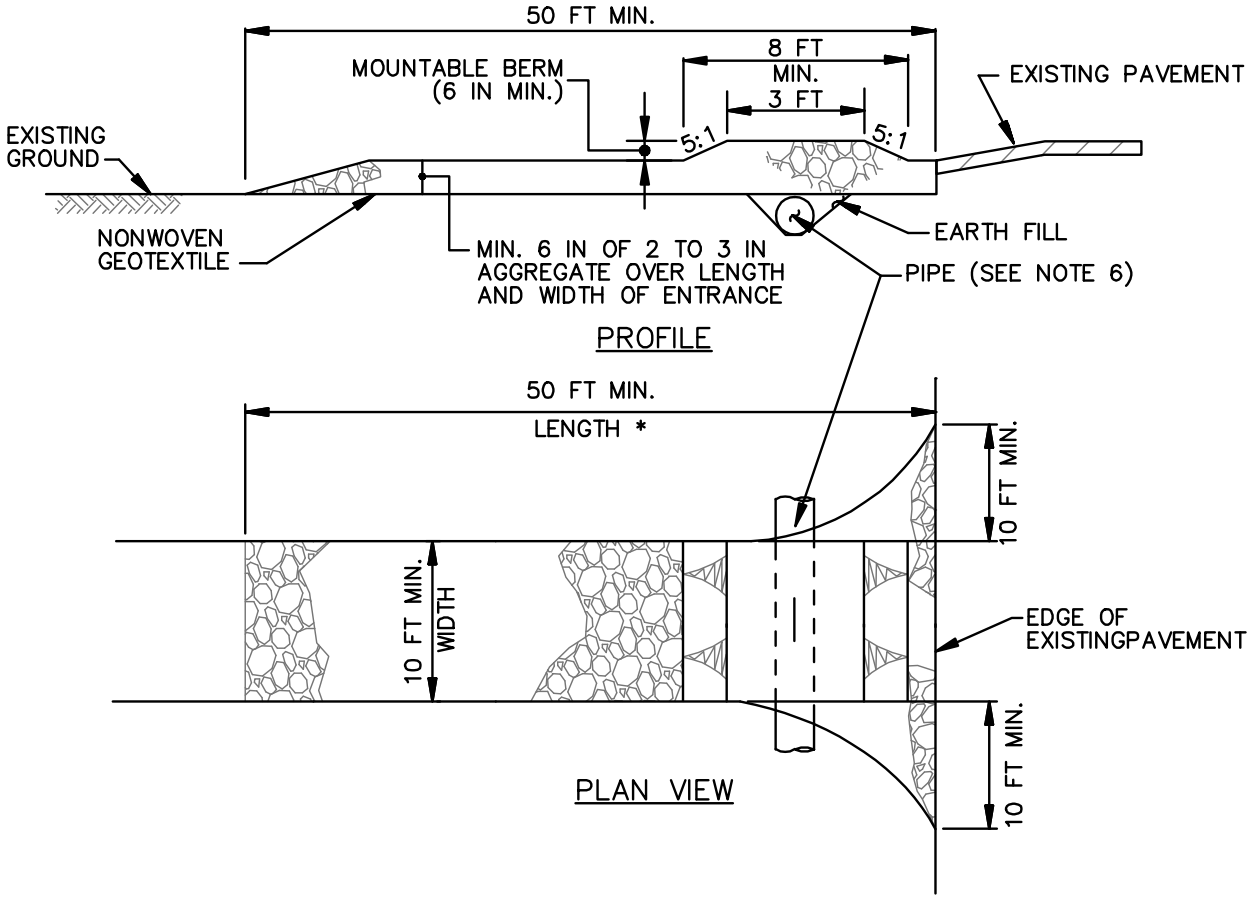

CONSTRUCTION SPECIFICATIONS

1. PLACE STABILIZED CONSTRUCTION ENTRANCE IN ACCORDANCE WITH THE APPROVED PLAN. VEHICLES MUST TRAVEL OVER THE ENTIRE LENGTH OF THE SCE. USE MINIMUM LENGTH OF 50 FEET (*30 FEET FOR SINGLE RESIDENCE LOT). USE MINIMUM WIDTH OF 10 FEET. FLARE SCE 10 FEET MINIMUM AT THE EXISTING ROAD TO PROVIDE A TURNING RADIUS.

2. PIPE ALL SURFACE WATER FLOWING TO OR DIVERTED TOWARD THE SCE UNDER THE ENTRANCE, MAINTAINING POSITIVE DRAINAGE. PROTECT PIPE INSTALLED THROUGH THE SCE WITH A MOUNTABLE BERM WITH 5:1 SLOPES AND A MINIMUM OF 12 INCHES OF STONE OVER THE PIPE. PROVIDE PIPE AS SPECIFIED ON APPROVED PLAN. WHEN THE SCE IS LOCATED AT A HIGH SPOT AND HAS NO DRAINAGE TO CONVEY, A PIPE IS NOT NECESSARY. A MOUNTABLE BERM IS REQUIRED WHEN SCE IS NOT LOCATED AT A HIGH SPOT.

3. PREPARE SUBGRADE AND PLACE NONWOVEN GEOTEXTILE, AS SPECIFIED IN SECTION H–1 MATERIALS.

4. PLACE CRUSHED AGGREGATE (2 TO 3 INCHES IN SIZE) OR EQUIVALENT RECYCLED CONCRETE (WITHOUT REBAR) AT LEAST 6 INCHES DEEP OVER THE LENGTH AND WIDTH OF THE SCE.

5. MAINTAIN ENTRANCE IN A CONDITION THAT MINIMIZES TRACKING OF SEDIMENT. ADD STONE OR MAKE OTHER REPAIRS AS CONDITIONS DEMAND TO MAINTAIN CLEAN SURFACE, MOUNTABLE BERM, AND SPECIFIED DIMENSIONS. IMMEDIATELY REMOVE STONE AND/OR SEDIMENT SPILLED, DROPPED, OR TRACKED ONTO ADJACENT ROADWAY BY VACUUMING, SCRAPING, AND/OR SWEEPING. WASHING ROADWAY TO REMOVE MUD TRACKED ONTO PAVEMENT IS NOT ACCEPTABLE UNLESS WASH WATER IS DIRECTED TO AN APPROVED SEDIMENT CONTROL PRACTICE.

B-2 STANDARDS AND SPECIFICATIONS

FOR

WASH RACK OPTION

Definition

A system used in conjunction with a stabilized construction entrance (SCE) for washing mud off construction vehicle wheels.

Purpose

To reduce tracking wherever conditions require washing the construction vehicle wheels prior to exiting the site.

Conditions Where Practice Applies

SCE with wash racks are located at points of ingress and egress where tracking of mud and sediment cannot be removed through the use of conventional maintenance practices (e.g., sweeping, vacuuming, etc.).

Design Criteria

1. SCE with wash rack must drain to an approved sediment trapping device.

2. SCE with wash rack cannot be installed over existing pavement.

3. Wash rack must be designed of material that is constructed and manufactured to withstand the anticipated traffic loads. Wash racks may be of concrete, steel, or other materials.

Maintenance

The area under the wash rack must be maintained free of accumulated sediment. If damaged, the wash rack must be repaired or replaced.

DETAIL B-2 WASH RACK OPTION

STANDARD SYMBOL

WR

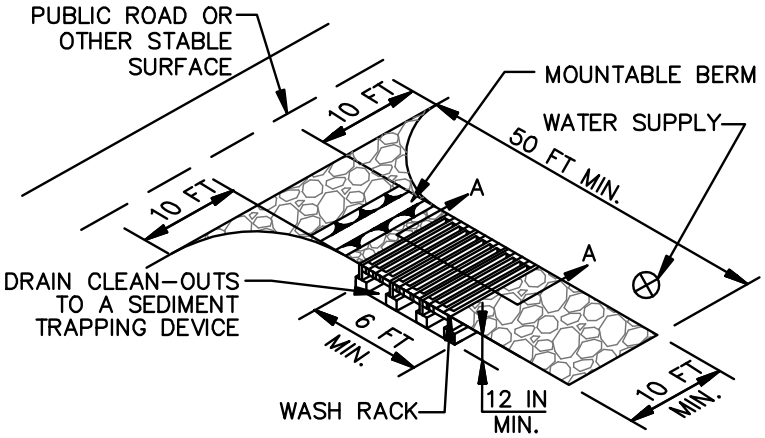

ISOMETRIC VIEW – WASH RACK IN SCE

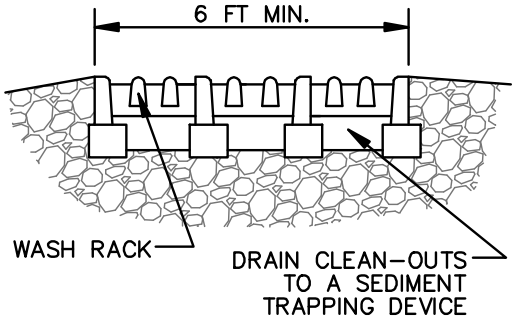

SECTION A–A

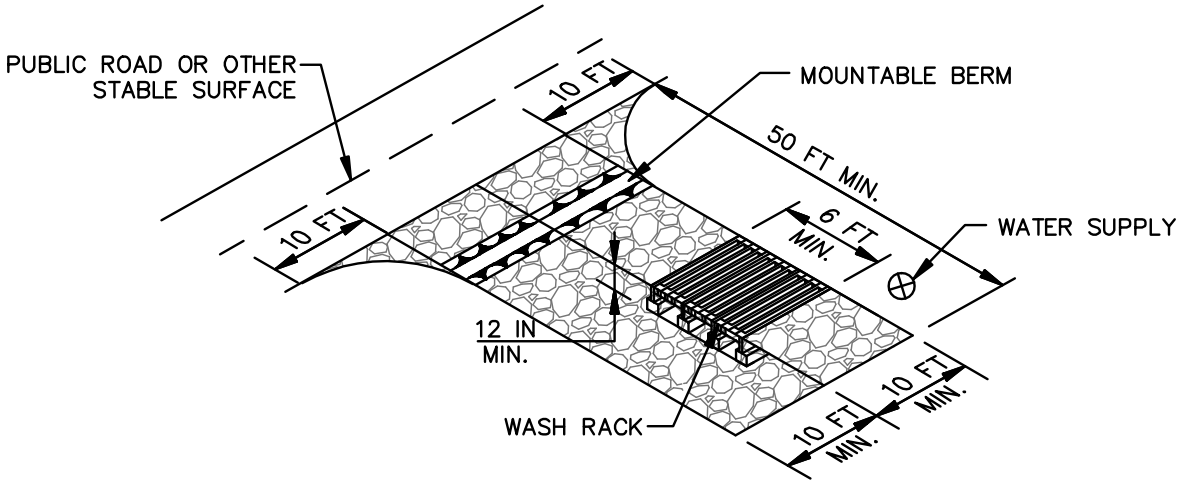

ISOMETRIC VIEW– WASH RACK ALONG SCE

CONSTRUCTION SPECIFICATIONS

1. USE A WASH RACK DESIGNED AND CONSTRUCTED/MANUFACTURED FOR THE ANTICIPATED TRAFFIC LOADS. CONCRETE, STEEL, OR OTHER MATERIALS ARE ACCEPTABLE. PRE–FABRICATED UNITS SUCH AS CATTLE GUARDS ARE ACCEPTABLE. USE MINIMUM DIMENSION OF 6 FEET x 10 FEET. ORIENT DIRECTION OF RIBS AS SHOWN ON THE DETAIL.
2. INSTALL PRIOR TO, ALONG SIDE OF, OR AS PART OF THE SCE.
3. DIRECT WASH WATER TO AN APPROVED SEDIMENT TRAPPING DEVICE.
4. KEEP AREA UNDER WASH RACK FREE OF ACCUMULATED SEDIMENT. IF DAMAGED, REPAIR OR REPLACE WASH RACK.

B-3 STANDARDS AND SPECIFICATIONS

FOR

LAND GRADING

Definition

Reshaping the existing land surface to provide suitable topography for building facilities and other site improvements.

Purpose

To provide erosion control and vegetative establishment for extreme changes in grade.

Conditions Where Practice Applies

Earth disturbances or extreme grade modifications on steep or long slopes.

Design Criteria

The grading plan should be based on the incorporation of building designs and street layouts that fit and utilize existing topography and desirable natural surroundings to avoid extreme grade modifications. Information submitted must provide sufficient topographic surveys and soil investigations to determine limitations that must be imposed on the grading operation related to slope stability, adjacent properties, drainage patterns, measures for water removal, and vegetative treatment, etc.

Many jurisdictions have regulations and design procedures already established for land grading that must be followed. The plan must show existing and proposed contours for the area(s) to be graded including practices for erosion control, slope stabilization, and safe conveyance of runoff (e.g., waterways, lined channels, reverse benches, grade stabilization structures). The grading/construction plans are to include the phasing of these practices and consideration of the following:

1. Provisions to safely convey surface runoff to storm drains, protected outlets or stable water courses to ensure that surface runoff will not damage slopes or other graded areas.

2. Cut and fill slopes, stabilized with grasses, no steeper than 2:l. (Where the slope is to be mowed, the slope should be no steeper than 3:l, but 4:l is preferred because of safety factors related to mowing steep slopes.) Slopes steeper than 2:l require special design and stabilization considerations to be shown on the plans.

3. Benching per Detail B-3-1 whenever the vertical interval (height) of any 2:l slope exceeds 20 feet; for 3:l slopes, when it exceeds 30 feet; and for 4:l slopes, when it exceeds 40 feet. Locate benches to divide the slope face as equally as possible and to convey the water to a stable outlet. Soils, seeps, rock outcrops, etc. are to be taken into consideration when designing benches.

    a. Provide benches with a minimum width of six feet for ease of maintenance.

    b. Design benches with a reverse slope of 6:l or flatter to the toe of the upper slope and with a minimum of one foot in depth. Grade the longitudinal slope of the bench between 2 percent and 3 percent, unless accompanied by appropriate design and computations.

c. The maximum allowable flow length within a bench is 800 feet unless accompanied by appropriate design and computations.

4. Diversion of surface water from the face of all cut and fill slopes using earth dikes or swales. Convey surface water down slope using a designed structure, and:

   a. Protect the face of all graded slopes from surface runoff until they are stabilized.

   b. Do not subject the slope's face to any concentrated flow of surface water such as from natural drainage ways, graded swales, downspouts, etc.

   c. Protect the face of the slope by special erosion control materials to include, but not be limited to, approved vegetative stabilization practices, riprap or other approved stabilization methods.

5. Serrated slope as shown in Detail B-3-2. The steepest allowable slope for ripable rock is 1.5:1. For non rock surfaces, the slopes are to be 2:1 or flatter. These steps will weather and act to hold moisture, lime, fertilizer and seed thus producing a much quicker and longer lived vegetative cover and better slope stabilization.

6. Subsurface drainage provisions. Provide subsurface drainage where necessary to intercept seepage that would otherwise adversely affect slope stability or create excessively wet site conditions.

7. Proximity to adjacent property. Slopes must not be created close to property lines without adequate protection against sedimentation, erosion, slippage, settlement, subsidence, or other related damages.

8. Quality of fill material. Fill material must be free of brush, rubbish, logs, stumps, building debris, and other objectionable material. Do not place frozen materials in the fill nor place the fill material on a frozen foundation.

9. Stabilization. Stabilize all disturbed areas structurally or vegetatively in compliance with Section B-4 Standards and Specifications for Stabilization Practices.

Maintenance

The line, grade, and cross section of benching and serrated slopes must be maintained. Benches and serrated slopes must continuously meet the requirements for Adequate Vegetative Establishment in accordance with Section B-4 Vegetative Stabilization.

DETAIL B-3-1 BENCHING

STANDARD SYMBOL

BENCHING

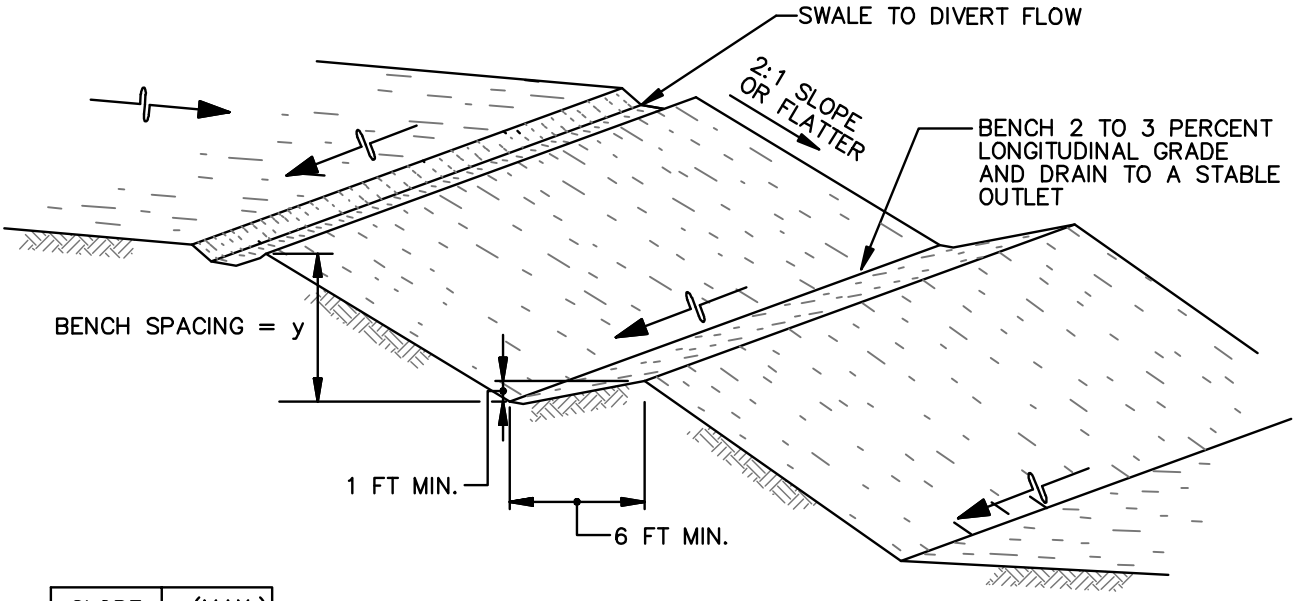

SLOPE	y (MAX.)
2:1	20 FT
3:1	30 FT
4:1	40 FT

CONSTRUCTION SPECIFICATIONS

1. USE FILL MATERIAL FREE OF BRUSH, RUBBISH, ROCKS, LOGS, STUMPS, BUILDING DEBRIS, AND OTHER OBJECTIONABLE MATERIALS THAT WOULD INTERFERE WITH OR PREVENT CONSTRUCTION OF SATISFACTORY FILLS.

2. DO NOT INCORPORATE FROZEN, SOFT, MUCKY, OR HIGHLY COMPRESSIBLE MATERIALS INTO FILL SLOPES OR STRUCTURAL FILLS. DO NOT PLACE FILL ON A FROZEN FOUNDATION.

3. PLACE ALL FILL IN LOOSE LIFTS NOT TO EXCEED 8 INCHES AND THEN COMPACT.

4. COMPACT ALL FILLS AS REQUIRED TO REDUCE EROSION, SLIPPAGE, SETTLEMENT, OR OTHER RELATED PROBLEMS. COMPACT FILL INTENDED TO SUPPORT BUILDINGS, STRUCTURES, CONDUITS, ETC., IN ACCORDANCE WITH LOCAL REQUIREMENTS OR CODES.

5. HANDLE SEEPS OR SPRINGS ENCOUNTERED DURING CONSTRUCTION IN ACCORDANCE WITH SECTION H–2 SUBSURFACE DRAINS OR OTHER APPROVED METHODS.

6. MAINTAIN LINE, GRADE, AND CROSS SECTION OF BENCHING. STABILIZE IN ACCORDANCE WITH THE 3/7 DAY STABILIZATION CRITERIA OR AS SPECIFIED ON THE APPROVED EROSION AND SEDIMENT CONTROL PLAN. INSTALLATION OF EROSION CONTROL MATTING MAY BE NECESSARY IN BENCH/SWALE INVERTS. CONTINUOUSLY MEET REQUIREMENTS FOR ADEQUATE VEGETATIVE ESTABLISHMENT IN ACCORDANCE WITH SECTION B–4 VEGETATIVE STABILIZATION.

7. KEEP ALL BENCHES FREE OF SEDIMENT DURING ALL PHASES OF DEVELOPMENT.

DETAIL B-3-2 SERRATED SLOPE

STANDARD SYMBOL

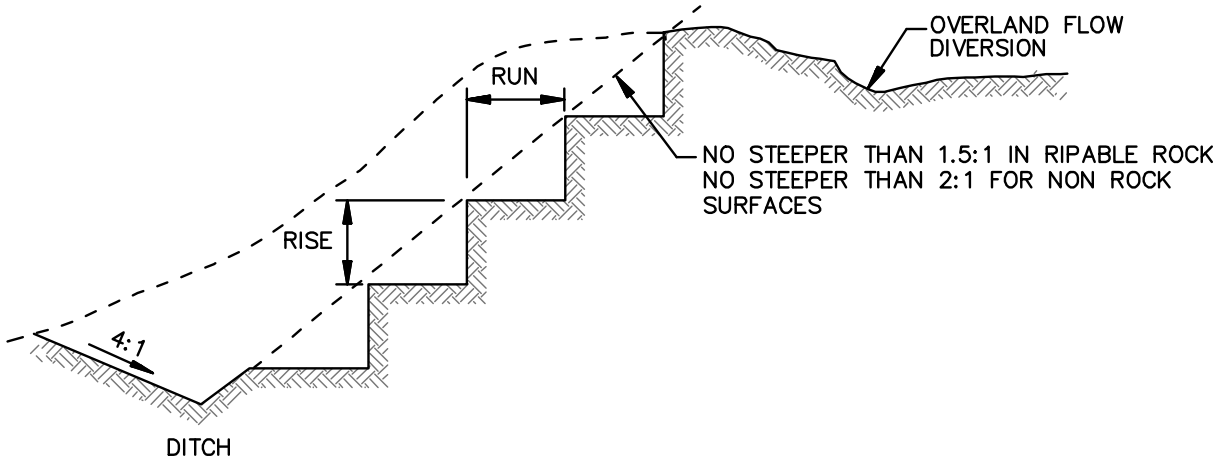

TYPICAL SECTION

CONSTRUCTION SPECIFICATIONS

1. DIVERT OVERLAND FLOW FROM THE TOP OF ALL SERRATED CUT SLOPES AND CARRY TO A SUITABLE OUTLET.
2. MAKE SERRATIONS AS THE EXCAVATION PROGRESSES.
3. CONSTRUCT EACH STEP OR SERRATION ON THE CONTOUR. RISE & RUN DIMENSIONS WILL VARY DEPENDING ON THE FINAL SLOPE RATIO. FOR RIPABLE ROCK SURFACES, MAKE TWO FOOT VERTICAL (RISE) AND THREE FOOT HORIZONTAL (RUN) SERRATIONS AT A SLOPE RATIO NO STEEPER THAN 1.5:1. FOR NON ROCK SURFACES, MAKE TWO FOOT VERTICAL (RISE) AND FOUR FOOT HORIZONTAL (RUNS) SERRATIONS AT A SLOPE RATIO NO STEEPER THAN 2:1.
4. KEEP ALL BENCHES FREE OF SEDIMENT DURING ALL PHASES OF CONSTRUCTION.
5. HANDLE SEEPS OR SPRINGS ENCOUNTERED DURING CONSTRUCTION IN ACCORDANCE WITH SECTION H–2 SUBSURFACE DRAINS OR OTHER APPROVED METHODS.
6. MAINTAIN LINE, GRADE, AND CROSS SECTION OF SERRATED SLOPES. TEMPORARILY OR PERMANENTLY STABILIZE ALL GRADED, NON ROCK SURFACES IN ACCORDANCE WITH THE 3/7 DAY STABILIZATION REQUIREMENTS OR AS SPECIFIED ON THE APPROVED EROSION AND SEDIMENT CONTROL PLAN. CONTINUOUSLY MEET REQUIREMENTS FOR ADEQUATE VEGETATIVE ESTABLISHMENT IN ACCORDANCE WITH SECTION B–4 VEGETATIVE STABILIZATION.

B-4 STANDARDS AND SPECIFICATIONS

FOR

VEGETATIVE STABILIZATION

Definition

Using vegetation as cover to protect exposed soil from erosion.

Purpose

To promote the establishment of vegetation on exposed soil.

Conditions Where Practice Applies

On all disturbed areas not stabilized by other methods. This specification is divided into sections on incremental stabilization; soil preparation, soil amendments and topsoiling; seeding and mulching; temporary stabilization; and permanent stabilization.

Effects on Water Quality and Quantity

Stabilization practices are used to promote the establishment of vegetation on exposed soil. When soil is stabilized with vegetation, the soil is less likely to erode and more likely to allow infiltration of rainfall, thereby reducing sediment loads and runoff to downstream areas.

Planting vegetation in disturbed areas will have an effect on the water budget, especially on volumes and rates of runoff, infiltration, evaporation, transpiration, percolation, and groundwater recharge. Over time, vegetation will increase organic matter content and improve the water holding capacity of the soil and subsequent plant growth.

Vegetation will help reduce the movement of sediment, nutrients, and other chemicals carried by runoff to receiving waters. Plants will also help protect groundwater supplies by assimilating those substances present within the root zone.

Sediment control practices must remain in place during grading, seedbed preparation, seeding, mulching, and vegetative establishment.

Adequate Vegetative Establishment

Inspect seeded areas for vegetative establishment and make necessary repairs, replacements, and reseedings within the planting season.

1. Adequate vegetative stabilization requires 95 percent groundcover.

2. If an area has less than 40 percent groundcover, restabilize following the original recommendations for lime, fertilizer, seedbed preparation, and seeding.

3. If an area has between 40 and 94 percent groundcover, over-seed and fertilize using half of the rates originally specified.

4. Maintenance fertilizer rates for permanent seeding are shown in Table B.6.

B-4-1 STANDARDS AND SPECIFICATIONS

FOR

INCREMENTAL STABILIZATION

Definition

Establishment of vegetative cover on cut and fill slopes.

Purpose

To provide timely vegetative cover on cut and fill slopes as work progresses.

Conditions Where Practice Applies

Any cut or fill slope greater than 15 feet in height. This practice also applies to stockpiles.

Criteria

A. Incremental Stabilization - Cut Slopes

1. Excavate and stabilize cut slopes in increments not to exceed 15 feet in height. Prepare seedbed and apply seed and mulch on all cut slopes as the work progresses.
2. Construction sequence example (Refer to Figure B.1):
   a. Construct and stabilize all temporary swales or dikes that will be used to convey runoff around the excavation.
   b. Perform Phase 1 excavation, prepare seedbed, and stabilize.
   c. Perform Phase 2 excavation, prepare seedbed, and stabilize. Overseed Phase 1 areas as necessary.
   d. Perform final phase excavation, prepare seedbed, and stabilize. Overseed previously seeded areas as necessary.

Note: Once excavation has begun the operation should be continuous from grubbing through the completion of grading and placement of topsoil (if required) and permanent seed and mulch. Any interruptions in the operation or completing the operation out of the seeding season will necessitate the application of temporary stabilization.

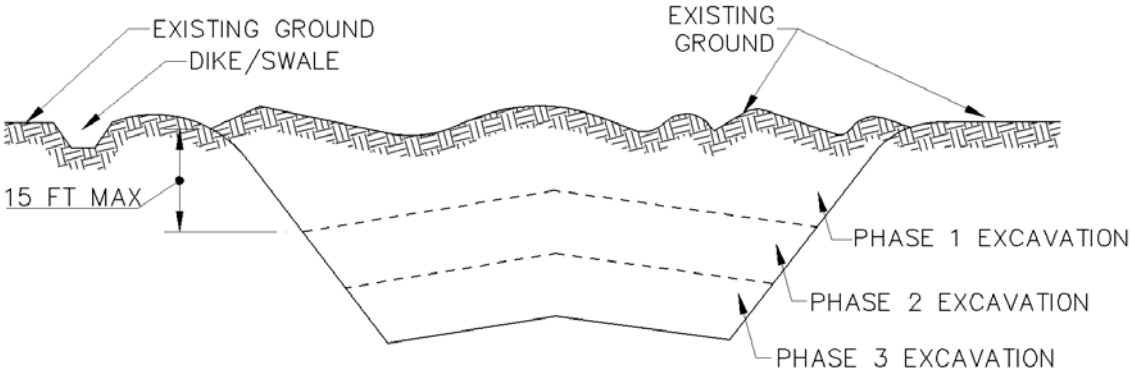

Figure B.1: Incremental Stabilization – Cut

B. Incremental Stabilization - Fill Slopes

1. Construct and stabilize fill slopes in increments not to exceed 15 feet in height. Prepare seedbed and apply seed and mulch on all slopes as the work progresses.
2. Stabilize slopes immediately when the vertical height of a lift reaches 15 feet, or when the grading operation ceases as prescribed in the plans.
3. At the end of each day, install temporary water conveyance practice(s), as necessary, to intercept surface runoff and convey it down the slope in a non-erosive manner.
4. Construction sequence example (Refer to Figure B.2):
   a. Construct and stabilize all temporary swales or dikes that will be used to divert runoff around the fill. Construct silt fence on low side of fill unless other methods shown on the plans address this area.
   b. At the end of each day, install temporary water conveyance practice(s), as necessary, to intercept surface runoff and convey it down the slope in a non-erosive manner.
   c. Place Phase 1 fill, prepare seedbed, and stabilize.
   d. Place Phase 2 fill, prepare seedbed, and stabilize.
   e. Place final phase fill, prepare seedbed, and stabilize. Overseed previously seeded areas as necessary.

Note: Once the placement of fill has begun the operation should be continuous from grubbing through the completion of grading and placement of topsoil (if required) and permanent seed and mulch. Any interruptions in the operation or completing the operation out of the seeding season will necessitate the application of temporary stabilization.

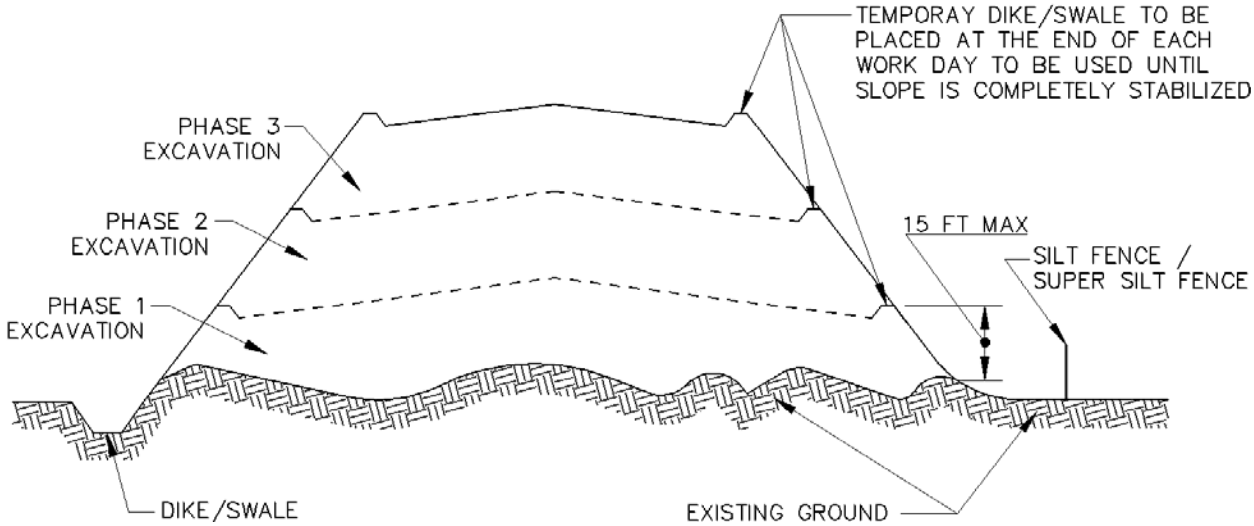

Figure B.2: Incremental Stabilization – Fill

B-4-2 STANDARDS AND SPECIFICATIONS

FOR

SOIL PREPARATION, TOPSOILING, AND SOIL AMENDMENTS

Definition

The process of preparing the soils to sustain adequate vegetative stabilization.

Purpose

To provide a suitable soil medium for vegetative growth.

Conditions Where Practice Applies

Where vegetative stabilization is to be established.

Criteria

A. Soil Preparation

1. Temporary Stabilization

   a. Seedbed preparation consists of loosening soil to a depth of 3 to 5 inches by means of suitable agricultural or construction equipment, such as disc harrows or chisel plows or rippers mounted on construction equipment. After the soil is loosened, it must not be rolled or dragged smooth but left in the roughened condition. Slopes 3:1 or flatter are to be tracked with ridges running parallel to the contour of the slope.

   b. Apply fertilizer and lime as prescribed on the plans.

   c. Incorporate lime and fertilizer into the top 3 to 5 inches of soil by disking or other suitable means.

2. Permanent Stabilization

   a. A soil test is required for any earth disturbance of 5 acres or more. The minimum soil conditions required for permanent vegetative establishment are:

      i. Soil pH between 6.0 and 7.0.

      ii. Soluble salts less than 500 parts per million (ppm).

      iii. Soil contains less than 40 percent clay but enough fine grained material (greater than 30 percent silt plus clay) to provide the capacity to hold a moderate amount of moisture. An exception: if lovegrass will be planted, then a sandy soil (less than 30 percent silt plus clay) would be acceptable.

      iv. Soil contains 1.5 percent minimum organic matter by weight.

      v. Soil contains sufficient pore space to permit adequate root penetration.

   b. Application of amendments or topsoil is required if on-site soils do not meet the above conditions.

   c. Graded areas must be maintained in a true and even grade as specified on the approved plan, then scarified or otherwise loosened to a depth of 3 to 5 inches.

d. Apply soil amendments as specified on the approved plan or as indicated by the results of a soil test.

e. Mix soil amendments into the top 3 to 5 inches of soil by disking or other suitable means. Rake lawn areas to smooth the surface, remove large objects like stones and branches, and ready the area for seed application. Loosen surface soil by dragging with a heavy chain or other equipment to roughen the surface where site conditions will not permit normal seedbed preparation. Track slopes 3:1 or flatter with tracked equipment leaving the soil in an irregular condition with ridges running parallel to the contour of the slope. Leave the top 1 to 3 inches of soil loose and friable. Seedbed loosening may be unnecessary on newly disturbed areas.

B. Topsoiling

1. Topsoil is placed over prepared subsoil prior to establishment of permanent vegetation. The purpose is to provide a suitable soil medium for vegetative growth. Soils of concern have low moisture content, low nutrient levels, low pH, materials toxic to plants, and/or unacceptable soil gradation.

2. Topsoil salvaged from an existing site may be used provided it meets the standards as set forth in these specifications. Typically, the depth of topsoil to be salvaged for a given soil type can be found in the representative soil profile section in the Soil Survey published by USDA-NRCS.

3. Topsoiling is limited to areas having 2:1 or flatter slopes where:

   a. The texture of the exposed subsoil/parent material is not adequate to produce vegetative growth.

   b. The soil material is so shallow that the rooting zone is not deep enough to support plants or furnish continuing supplies of moisture and plant nutrients.

   c. The original soil to be vegetated contains material toxic to plant growth.

   d. The soil is so acidic that treatment with limestone is not feasible.

4. Areas having slopes steeper than 2:1 require special consideration and design.

5. Topsoil Specifications: Soil to be used as topsoil must meet the following criteria:

   a. Topsoil must be a loam, sandy loam, clay loam, silt loam, sandy clay loam, or loamy sand. Other soils may be used if recommended by an agronomist or soil scientist and approved by the appropriate approval authority. Topsoil must not be a mixture of contrasting textured subsoils and must contain less than 5 percent by volume of cinders, stones, slag, coarse fragments, gravel, sticks, roots, trash, or other materials larger than 1½ inches in diameter.

   b. Topsoil must be free of noxious plants or plant parts such as Bermuda grass, quack grass, Johnson grass, nut sedge, poison ivy, thistle, or others as specified.

   c. Topsoil substitutes or amendments, as recommended by a qualified agronomist or soil scientist and approved by the appropriate approval authority, may be used in lieu of natural topsoil.

6. Topsoil Application

   a. Erosion and sediment control practices must be maintained when applying topsoil.

   b. Uniformly distribute topsoil in a 5 to 8 inch layer and lightly compact to a minimum thickness of 4 inches. Spreading is to be performed in such a manner that sodding or seeding can proceed with a minimum of additional soil preparation and tillage. Any irregularities in the surface resulting from topsoiling or other operations must be corrected in order to prevent the formation of depressions or water pockets.

   c. Topsoil must not be placed if the topsoil or subsoil is in a frozen or muddy condition, when the subsoil is excessively wet or in a condition that may otherwise be detrimental to proper grading

and seedbed preparation.

C. Soil Amendments (Fertilizer and Lime Specifications)

1. Soil tests must be performed to determine the exact ratios and application rates for both lime and fertilizer on sites having disturbed areas of 5 acres or more. Soil analysis may be performed by a recognized private or commercial laboratory. Soil samples taken for engineering purposes may also be used for chemical analyses.
2. Fertilizers must be uniform in composition, free flowing and suitable for accurate application by appropriate equipment. Manure may be substituted for fertilizer with prior approval from the appropriate approval authority. Fertilizers must all be delivered to the site fully labeled according to the applicable laws and must bear the name, trade name or trademark and warranty of the producer.
3. Lime materials must be ground limestone (hydrated or burnt lime may be substituted except when hydroseeding) which contains at least 50 percent total oxides (calcium oxide plus magnesium oxide). Limestone must be ground to such fineness that at least 50 percent will pass through a #100 mesh sieve and 98 to 100 percent will pass through a #20 mesh sieve.
4. Lime and fertilizer are to be evenly distributed and incorporated into the top 3 to 5 inches of soil by disking or other suitable means.
5. Where the subsoil is either highly acidic or composed of heavy clays, spread ground limestone at the rate of 4 to 8 tons/acre (200-400 pounds per 1,000 square feet) prior to the placement of topsoil.

B-4-3 STANDARDS AND SPECIFICATIONS

FOR

SEEDING AND MULCHING

Definition

The application of seed and mulch to establish vegetative cover.

Purpose

To protect disturbed soils from erosion during and at the end of construction.

Conditions Where Practice Applies

To the surface of all perimeter controls, slopes, and any disturbed area not under active grading.

Criteria

A. Seeding

1. Specifications

   a. All seed must meet the requirements of the Maryland State Seed Law. All seed must be subject to re-testing by a recognized seed laboratory. All seed used must have been tested within the 6 months immediately preceding the date of sowing such material on any project. Refer to Table B.4 regarding the quality of seed. Seed tags must be available upon request to the inspector to verify type of seed and seeding rate.

   b. Mulch alone may be applied between the fall and spring seeding dates only if the ground is frozen. The appropriate seeding mixture must be applied when the ground thaws.

   c. Inoculants: The inoculant for treating legume seed in the seed mixtures must be a pure culture of nitrogen fixing bacteria prepared specifically for the species. Inoculants must not be used later than the date indicated on the container. Add fresh inoculants as directed on the package. Use four times the recommended rate when hydroseeding. Note: It is very important to keep inoculant as cool as possible until used. Temperatures above 75 to 80 degrees Fahrenheit can weaken bacteria and make the inoculant less effective.

   d. Sod or seed must not be placed on soil which has been treated with soil sterilants or chemicals used for weed control until sufficient time has elapsed (14 days min.) to permit dissipation of phyto-toxic materials.

2. Application

   a. Dry Seeding: This includes use of conventional drop or broadcast spreaders.

      i. Incorporate seed into the subsoil at the rates prescribed on Temporary Seeding Table B.1, Permanent Seeding Table B.3, or site-specific seeding summaries.

      ii. Apply seed in two directions, perpendicular to each other. Apply half the seeding rate in each direction. Roll the seeded area with a weighted roller to provide good seed to soil contact.

b. Drill or Cultipacker Seeding: Mechanized seeders that apply and cover seed with soil.

i. Cultipacking seeders are required to bury the seed in such a fashion as to provide at least 1/4 inch of soil covering. Seedbed must be firm after planting.

ii. Apply seed in two directions, perpendicular to each other. Apply half the seeding rate in each direction.

c. Hydroseeding: Apply seed uniformly with hydroseeder (slurry includes seed and fertilizer).

i. If fertilizer is being applied at the time of seeding, the application rates should not exceed the following: nitrogen, 100 pounds per acre total of soluble nitrogen; P_2O_5 (phosphorous), 200 pounds per acre; K_2O (potassium), 200 pounds per acre.

ii. Lime: Use only ground agricultural limestone (up to 3 tons per acre may be applied by hydroseeding). Normally, not more than 2 tons are applied by hydroseeding at any one time. Do not use burnt or hydrated lime when hydroseeding.

iii. Mix seed and fertilizer on site and seed immediately and without interruption.

iv. When hydroseeding do not incorporate seed into the soil.

B. Mulching

1. Mulch Materials (in order of preference)

a. Straw consisting of thoroughly threshed wheat, rye, oat, or barley and reasonably bright in color. Straw is to be free of noxious weed seeds as specified in the Maryland Seed Law and not musty, moldy, caked, decayed, or excessively dusty. **Note: Use only sterile straw mulch in areas where one species of grass is desired.**

b. Wood Cellulose Fiber Mulch (WCFM) consisting of specially prepared wood cellulose processed into a uniform fibrous physical state.

i. WCFM is to be dyed green or contain a green dye in the package that will provide an appropriate color to facilitate visual inspection of the uniformly spread slurry.

ii. WCFM, including dye, must contain no germination or growth inhibiting factors.

iii. WCFM materials are to be manufactured and processed in such a manner that the wood cellulose fiber mulch will remain in uniform suspension in water under agitation and will blend with seed, fertilizer and other additives to form a homogeneous slurry. The mulch material must form a blotter-like ground cover, on application, having moisture absorption and percolation properties and must cover and hold grass seed in contact with the soil without inhibiting the growth of the grass seedlings.

iv. WCFM material must not contain elements or compounds at concentration levels that will be phyto-toxic.

v. WCFM must conform to the following physical requirements: fiber length of approximately 10 millimeters, diameter approximately 1 millimeter, pH range of 4.0 to 8.5, ash content of 1.6 percent maximum and water holding capacity of 90 percent minimum.

2. Application

   a. Apply mulch to all seeded areas immediately after seeding.

   b. When straw mulch is used, spread it over all seeded areas at the rate of 2 tons per acre to a uniform loose depth of 1 to 2 inches. Apply mulch to achieve a uniform distribution and depth so that the soil surface is not exposed. When using a mulch anchoring tool, increase the application rate to 2.5 tons per acre.

   c. Wood cellulose fiber used as mulch must be applied at a net dry weight of 1500 pounds per acre. Mix the wood cellulose fiber with water to attain a mixture with a maximum of 50 pounds of wood cellulose fiber per 100 gallons of water.

3. Anchoring

   a. Perform mulch anchoring immediately following application of mulch to minimize loss by wind or water. This may be done by one of the following methods (listed by preference), depending upon the size of the area and erosion hazard:

      i. A mulch anchoring tool is a tractor drawn implement designed to punch and anchor mulch into the soil surface a minimum of 2 inches. This practice is most effective on large areas, but is limited to flatter slopes where equipment can operate safely. If used on sloping land, this practice should follow the contour.

      ii. Wood cellulose fiber may be used for anchoring straw. Apply the fiber binder at a net dry weight of 750 pounds per acre. Mix the wood cellulose fiber with water at a maximum of 50 pounds of wood cellulose fiber per 100 gallons of water.

      iii. Synthetic binders such as Acrylic DLR (Agro-Tack), DCA-70, Petroset, Terra Tax II, Terra Tack AR or other approved equal may be used. Follow application rates as specified by the manufacturer. Application of liquid binders needs to be heavier at the edges where wind catches mulch, such as in valleys and on crests of banks. **Use of asphalt binders is strictly prohibited**.

      iv. Lightweight plastic netting may be stapled over the mulch according to manufacturer recommendations. Netting is usually available in rolls 4 to 15 feet wide and 300 to 3,000 feet long.

B-4-4 STANDARDS AND SPECIFICATIONS

FOR

TEMPORARY STABILIZATION

Definition

To stabilize disturbed soils with vegetation for up to 6 months.

Purpose

To use fast growing vegetation that provides cover on disturbed soils.

Conditions Where Practice Applies

Exposed soils where ground cover is needed for a period of 6 months or less. For longer duration of time, permanent stabilization practices are required.

Criteria

1. Select one or more of the species or seed mixtures listed in Table B.1 for the appropriate Plant Hardiness Zone (from Figure B.3), and enter them in the Temporary Seeding Summary below along with application rates, seeding dates and seeding depths. If this Summary is not put on the plan and completed, then Table B.1 plus fertilizer and lime rates must be put on the plan.
2. For sites having soil tests performed, use and show the recommended rates by the testing agency. Soil tests are not required for Temporary Seeding.
3. When stabilization is required outside of a seeding season, apply seed and mulch or straw mulch alone as prescribed in Section B-4-3.A.1.b and maintain until the next seeding season.

Temporary Seeding Summary

Hardiness Zone (from Figure B.3)**:** _____ **Seed Mixture** (from Table B.1)**:** _____					**Fertilizer Rate (10-20-20)**	**Lime Rate**
No.	**Species**	**Application Rate (lb/ac)**	**Seeding Dates**	**Seeding Depths**		
					436 lb/ac (10 lb/1000 sf)	2 tons/ac (90 lb/1000 sf)

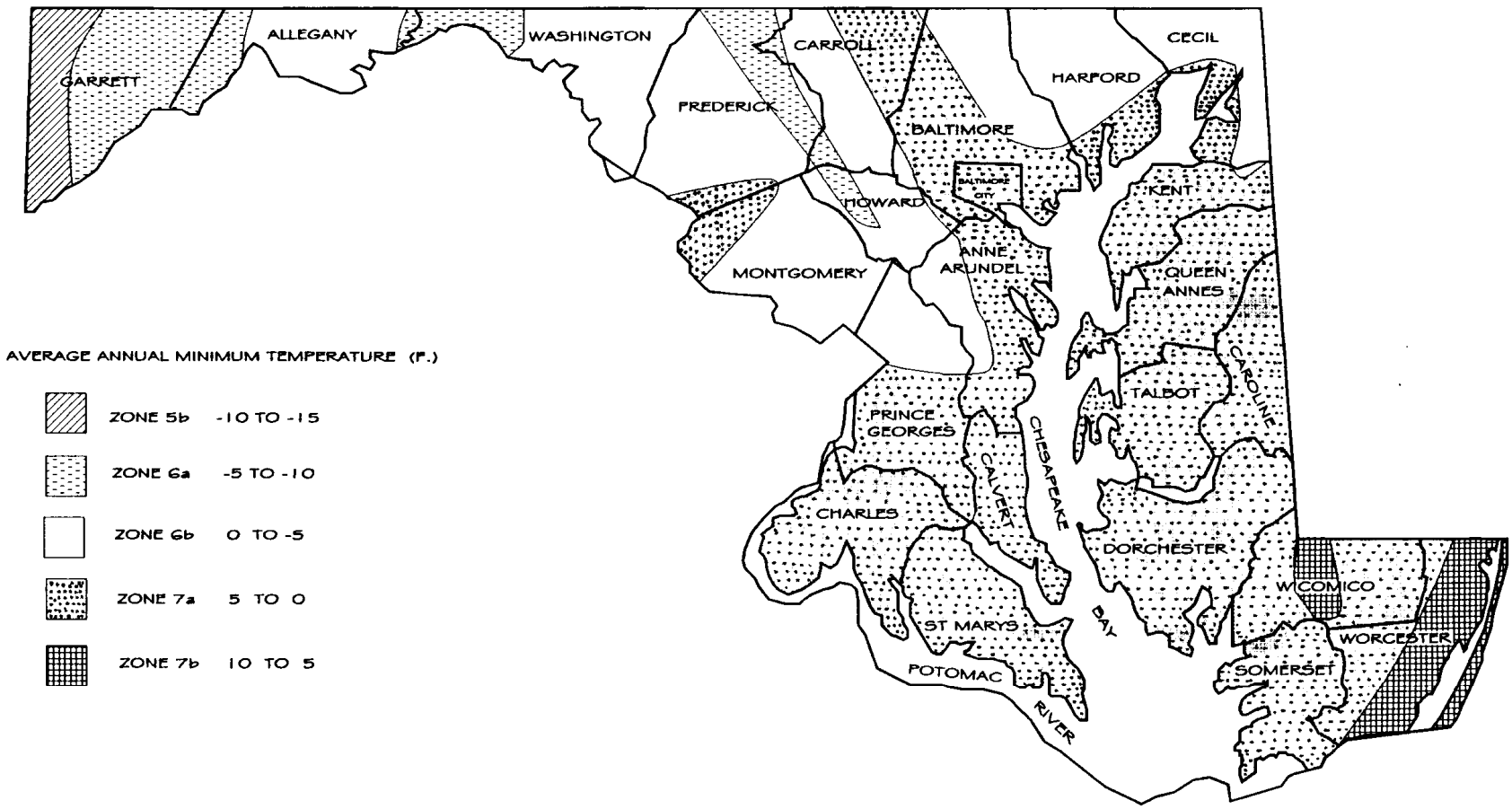

Plant Hardiness Zones delineate areas where a species can be successfully established based on average annual minimum temperatures.

Figure B.3: U.S.D.A. Plant Hardiness Zones

Table B.1: Temporary Seeding for Site Stabilization

Plant Species	Seeding Rate [1/]		Seeding Depth [2/] (inches)	Recommended Seeding Dates by Plant Hardiness Zone [3/]		
	lb/ac	lb/1000 ft^2		5b and 6a	6b	7a and 7b
Cool-Season Grasses						
Annual Ryegrass (*Lolium perenne ssp. multiflorum*)	40	1.0	0.5	Mar 15 to May 31; Aug 1 to Sep 30	Mar 1 to May 15; Aug 1 to Oct 15	Feb 15 to Apr 30; Aug 15 to Nov 30
Barley (*Hordeum vulgare*)	96	2.2	1.0	Mar 15 to May 31; Aug 1 to Sep 30	Mar 1 to May 15; Aug 1 to Oct 15	Feb 15 to Apr 30; Aug 15 to Nov 30
Oats (*Avena sativa*)	72	1.7	1.0	Mar 15 to May 31; Aug 1 to Sep 30	Mar 1 to May 15; Aug 1 to Oct 15	Feb 15 to Apr 30; Aug 15 to Nov 30
Wheat (*Triticum aestivum*)	120	2.8	1.0	Mar 15 to May 31; Aug 1 to Sep 30	Mar 1 to May 15; Aug 1 to Oct 15	Feb 15 to Apr 30; Aug 15 to Nov 30
Cereal Rye (*Secale cereale*)	112	2.8	1.0	Mar 15 to May 31; Aug 1 to Oct 31	Mar 1 to May 15; Aug 1 to Nov 15	Feb 15 to Apr 30; Aug 15 to Dec 15
Warm-Season Grasses						
Foxtail Millet (*Setaria italica*)	30	0.7	0.5	Jun 1 to Jul 31	May 16 to Jul 31	May 1 to Aug 14
Pearl Millet (*Pennisetum glaucum*)	20	0.5	0.5	Jun 1 to Jul 31	May 16 to Jul 31	May 1 to Aug 14

NOTES:

1/ Seeding rates for the warm-season grasses are in pounds of Pure Live Seed (PLS). Actual planting rates shall be adjusted to reflect percent seed germination and purity, as tested. Adjustments are usually not needed for the cool-season grasses.

Seeding rates listed above are for temporary seedings, when planted alone. When planted as a nurse crop with permanent seed mixes, use 1/3 of the seeding rate listed above for barley, oats, and wheat. For smaller-seeded grasses (annual ryegrass, pearl millet, foxtail millet), do not exceed more than 5% (by weight) of the overall permanent seeding mix. Cereal rye generally should not be used as a nurse crop, unless planting will occur in very late fall beyond the seeding dates for other temporary seedings. Cereal rye has allelopathic properties that inhibit the germination and growth of other plants. If it must be used as a nurse crop, seed at 1/3 of the rate listed above.

Oats are the recommended nurse crop for warm-season grasses.

2/ For sandy soils, plant seeds at twice the depth listed above.

3/ The planting dates listed are averages for each Zone and may require adjustment to reflect local conditions, especially near the boundaries of the zone.

B-4-5 STANDARDS AND SPECIFICATIONS

FOR

PERMANENT STABILIZATION

Definition

To stabilize disturbed soils with permanent vegetation.

Purpose

To use long-lived perennial grasses and legumes to establish permanent ground cover on disturbed soils.

Conditions Where Practice Applies

Exposed soils where ground cover is needed for 6 months or more.

Criteria

A. Seed Mixtures

1. General Use

   a. Select one or more of the species or mixtures listed in Table B.3 for the appropriate Plant Hardiness Zone (from Figure B.3) and based on the site condition or purpose found on Table B.2. Enter selected mixture(s), application rates, and seeding dates in the Permanent Seeding Summary. The Summary is to be placed on the plan.

   b. Additional planting specifications for exceptional sites such as shorelines, stream banks, or dunes or for special purposes such as wildlife or aesthetic treatment may be found in USDA-NRCS Technical Field Office Guide, Section 342 - Critical Area Planting.

   c. For sites having disturbed area over 5 acres, use and show the rates recommended by the soil testing agency.

   d. For areas receiving low maintenance, apply urea form fertilizer (46-0-0) at 3 ½ pounds per 1000 square feet (150 pounds per acre) at the time of seeding in addition to the soil amendments shown in the Permanent Seeding Summary .

2. Turfgrass Mixtures

   a. Areas where turfgrass may be desired include lawns, parks, playgrounds, and commercial sites which will receive a medium to high level of maintenance.

   b. Select one or more of the species or mixtures listed below based on the site conditions or purpose. Enter selected mixture(s), application rates, and seeding dates in the Permanent Seeding Summary. The summary is to be placed on the plan.

      i. Kentucky Bluegrass: Full Sun Mixture: For use in areas that receive intensive management. Irrigation required in the areas of central Maryland and Eastern Shore. Recommended Certified Kentucky Bluegrass Cultivars Seeding Rate: 1.5 to 2.0 pounds per 1000 square feet. Choose a minimum of three Kentucky bluegrass cultivars with each ranging from 10 to 35 percent of the total mixture by weight.

      ii. Kentucky Bluegrass/Perennial Rye: Full Sun Mixture: For use in full sun areas where

rapid establishment is necessary and when turf will receive medium to intensive management. Certified Perennial Ryegrass Cultivars/Certified Kentucky Bluegrass Seeding Rate: 2 pounds mixture per 1000 square feet. Choose a minimum of three Kentucky bluegrass cultivars with each ranging from 10 to 35 percent of the total mixture by weight.

iii. Tall Fescue/Kentucky Bluegrass: Full Sun Mixture: For use in drought prone areas and/or for areas receiving low to medium management in full sun to medium shade. Recommended mixture includes; Certified Tall Fescue Cultivars 95 to 100 percent, Certified Kentucky Bluegrass Cultivars 0 to 5 percent. Seeding Rate: 5 to 8 pounds per 1000 square feet. One or more cultivars may be blended.

iv. Kentucky Bluegrass/Fine Fescue: Shade Mixture: For use in areas with shade in Bluegrass lawns. For establishment in high quality, intensively managed turf area. Mixture includes; Certified Kentucky Bluegrass Cultivars 30 to 40 percent and Certified Fine Fescue and 60 to 70 percent. Seeding Rate: 1½ to 3 pounds per 1000 square feet.

Notes:
Select turfgrass varieties from those listed in the most current University of Maryland Publication, Agronomy Memo #77, "Turfgrass Cultivar Recommendations for Maryland"

Choose certified material. Certified material is the best guarantee of cultivar purity. The certification program of the Maryland Department of Agriculture, Turf and Seed Section, provides a reliable means of consumer protection and assures a pure genetic line

c. Ideal Times of Seeding for Turf Grass Mixtures

Western MD: March 15 to June 1, August 1 to October 1 (Hardiness Zones: 5b, 6a)

Central MD: March 1 to May 15, August 15 to October 15 (Hardiness Zone: 6b)

Southern MD, Eastern Shore: March 1 to May 15, August 15 to October 15 (Hardiness Zones: 7a, 7b)

d. Till areas to receive seed by disking or other approved methods to a depth of 2 to 4 inches, level and rake the areas to prepare a proper seedbed. Remove stones and debris over 1½ inches in diameter. The resulting seedbed must be in such condition that future mowing of grasses will pose no difficulty.

e. If soil moisture is deficient, supply new seedings with adequate water for plant growth (½ to 1 inch every 3 to 4 days depending on soil texture) until they are firmly established. This is especially true when seedings are made late in the planting season, in abnormally dry or hot seasons, or on adverse sites.

Permanent Seeding Summary

Hardiness Zone (from Figure B.3): _____ **Seed Mixture** (from Table B.3): _____					**Fertilizer Rate (10-20-20)**			**Lime Rate**
No.	**Species**	**Application Rate (lb/ac)**	**Seeding Dates**	**Seeding Depths**	**N**	**P_2O_5**	**K_20**	
				¼- ½ in	45 pounds per acre (1.0 lb/ 1000 sf)	90 lb/ac (2 lb/ 1000 sf)	90 lb/ac (2 lb/ 1000 sf)	2 tons/ac (90 lb/ 1000 sf)
				¼- ½ in				
				¼- ½ in				

B. Sod: To provide quick cover on disturbed areas (2:1 grade or flatter).

1. General Specifications

   a. Class of turfgrass sod must be Maryland State Certified. Sod labels must be made available to the job foreman and inspector.

   b. Sod must be machine cut at a uniform soil thickness of ¾ inch, plus or minus ¼ inch, at the time of cutting. Measurement for thickness must exclude top growth and thatch. Broken pads and torn or uneven ends will not be acceptable.

   c. Standard size sections of sod must be strong enough to support their own weight and retain their size and shape when suspended vertically with a firm grasp on the upper 10 percent of the section.

   d. Sod must not be harvested or transplanted when moisture content (excessively dry or wet) may adversely affect its survival.

   e. Sod must be harvested, delivered, and installed within a period of 36 hours. Sod not transplanted within this period must be approved by an agronomist or soil scientist prior to its installation.

2. Sod Installation

   a. During periods of excessively high temperature or in areas having dry subsoil, lightly irrigate the subsoil immediately prior to laying the sod.

   b. Lay the first row of sod in a straight line with subsequent rows placed parallel to it and tightly wedged against each other. Stagger lateral joints to promote more uniform growth and strength. Ensure that sod is not stretched or overlapped and that all joints are butted tight in order to prevent voids which would cause air drying of the roots.

   c. Wherever possible, lay sod with the long edges parallel to the contour and with staggering joints. Roll and tamp, peg or otherwise secure the sod to prevent slippage on slopes. Ensure solid contact exists between sod roots and the underlying soil surface.

   d. Water the sod immediately following rolling and tamping until the underside of the new sod pad and soil surface below the sod are thoroughly wet. Complete the operations of laying, tamping and irrigating for any piece of sod within eight hours.

3. Sod Maintenance

   a. In the absence of adequate rainfall, water daily during the first week or as often and sufficiently as necessary to maintain moist soil to a depth of 4 inches. Water sod during the heat of the day to prevent wilting.

   b. After the first week, sod watering is required as necessary to maintain adequate moisture content.

   c. Do not mow until the sod is firmly rooted. No more than ⅓ of the grass leaf must be removed by the initial cutting or subsequent cuttings. Maintain a grass height of at least 3 inches unless otherwise specified.

Table B.2: Recommended Permanent Seeding Mixtures by Site Condition or Purpose

Site Condition or Purpose of the Planting	Recommended Mix (see Table B.3)												
	1	**2**	**3**	**4**	**5**	**6**	**7**	**8**	**9**	**10**	**11**	**12**	**13**
Steep Slopes, Roadsides	R	R	R	A	R	A				A	A	R	R
Sand and Gravel Pits, Sanitary Landfills	R	R	R	A	R	A				A	A	R	
Salt-Damaged Areas	A												R
Mine Spoil, Dredged Material, and Spoil Banks	A		R	A	A								
Utility Rights-of-Way	R	R	R	R	R	R	A			R	R	R	
Dikes and Dams	A	A	R	A		R	R	A		R	R	R	
Berms and Low Embankments (not on Ponds)	R	R	R	R	R	R	A	A		R	R	R	A
Pond and Channel Banks, Streambanks	R	R	R	R	A	A	A			A	A		
Grassed Waterways, Diversions, Terraces, Spillways	A				A	R	R	A	R		R		A
Bottom of Drainage Channels, Swales, Detention Basins				A		R	A			A	R		R
Field Borders, Filter Strips, Contour Buffer Strips	R	R	R	A	A	R	A	R	R	R	R	R	A
Wastewater Treatment Strips and Areas								R	A	A			
Heavy Use Areas (Grass Loafing Paddocks for Livestock)								R					
Athletic Fields, Residential and Commercial Lawns							A	R	R		R		
Recreation Areas							R	R	R		R		

R = Recommended mix for this site condition or purpose.

A = Alternative mix, depending on site conditions.

Table B.3: Selected List of Permanent Herbaceous Seeding Mixtures

Mix	Recommended Cultivar	Seeding Rate [1/]		Soil Drainage Class [2/]	Max. Height (inch)	Maint. Level [3/]	Remarks
		lb/ac	lb/ 1000 ft^2				
WARM-SEASON/COOL-SEASON GRASS MIXES							
1. SELECT ONE WARM-SEASON GRASS:							
Switch Grass (*Panicum virgatum*)	Blackwell, Carthage, Cave-in-Rock, or Shelter	10	0.23				All species are native to Maryland.
OR							Plant this mix with a regular grass drill.
Coastal Panic Grass (*Panicum amarum var. amarulum*)	Atlantic	10	0.23				Coastal panicgrass is best adapted to Zones 7a and 7b.
AND ADD:							
Creeping Red Fescue (*Festuca rubra var. rubra*)	Dawson, Pennlawn, Flyer, Fortess, Ruby, or Salem	15	0.34	E - P	4 - 7	C - D	Creeping red fescue is a cool-season grass that will provide erosion protection while the warm-season grass (switchgrass or coastal panicgrass) is becoming established.
PLUS ONE OF THE FOLLOWING LEGUMES:							
Partridge Pea (*Chamaecrista fasciculate*)	Common	4	0.09				Switchgrass, coastal panicgrass, the 'Dawson' variety of creeping red fescue, and partridge pea are moderately salt-tolerant. Do not use bush clover or wild indigo on wet sites.
Bush Clover (*Lespedeza capitata*)	Common	2	0.05				
Wild Indigo (*Baptisia tinctoria*)	Common	2	0.05				
2. Big Bluestem (*Andropogon gerardii*)	Niagara or Rountree	6	0.14				All species are native to Maryland.
Indiangrass (*Sorghastrum nutans*)	Rumsey	6	0.14				The indiangrass and bluestems have fluffy seeds. Plant with a specialized native seed drill.
Little Bluestem (*Schizachyrium scoparium*)	Aldous or Blaze	4	0.09				
Creeping Red Fescue (*Festuca rubra var. rubra*)	Dawson, Pennlawn, Flyer, Fortess, Ruby, or Salem	15	0.34	E - MW	6 - 8	C - D	Creeping red fescue is a cool-season grass that will provide erosion protection while the warm-season grasses are becoming established.
PLUS ONE OF THE FOLLOWING LEGUMES:							
Partridge Pea (*Chamaecrista fasciculata*)	Common	4	0.09				
Bush Clover (*Lespedeza capitata*)	Common	2	0.05				
Wild Indigo (*Baptisia tinctoria*)	Common	2	0.05				
Showy Tick-Trefoil (*Desmodium canadense*)	Common	1	0.02				

Table B.3: Selected List of Permanent Herbaceous Seeding Mixtures (Continued)

Mix	Recommended Cultivar	Seeding Rate [1/]		Soil Drainage Class [2/]	Max. Height (inch)	Maint. Level [3/]	Remarks
		lb/ac	lb/ 1000 ft^2				
WARM-SEASON/COOL-SEASON GRASS MIXES							
3. SELECT THREE GRASSES:							
Deertongue (*Dichanthelium clandestinum*)	Tioga	20	0.46				Excellent for excessively droughty, low pH (acidic) soils.
Sheep Fescue (*Festuca ovina*)	Common or Bighorn	20	0.46				Sheep fescue, Canada wild rye, and redtop are cool-season grasses that will provide erosion protection while the warm-season grass (deertongue) is becoming established.
OR							
Canada Wild Rye (*Elymus canadensis*)	Common	3	0.07				
Redtop (*Agrostis gigantean*)	Streaker	1	0.02	E - MW	4 - 6	C - D	
PLUS ONE OF THE FOLLOWING LEGUMES:							Common lespedeza ('Kobe' variety) is more tolerant of low acidity and high manganese concentrations than Korean lespedeza. These lespedezas are reseeding annuals.
Common Lespedeza (*Lespedeza striata*)	Kobe	10	0.23				
Korean Lespedeza (*Lespedeza stipulacea*)	Climax or Rowan	10	0.23				
4. Deertongue (*Dichanthelium clandestinum*)	Tioga	15	0.34				
Creeping Red Fescue (Festuca rubra var. rubra)	Dawson, Pennlawn, Flyer, Fortess, Ruby, or Salem	20	0.46				
Virginia Wild Rye (*Elymus virginicus*)	Common	5	0.11	W - P	2 - 3	C - D	Use Virginia wild rye on moist, shady sites.
OR							
Canada Wild Rye (*Elymus canadensis*)	Common	5	0.11				Use Canada wild rye on droughty sites.

Table B.3: Selected List of Permanent Herbaceous Seeding Mixtures (Continued)

Mix	Recommended Cultivar	Seeding Rate [1/]		Soil Drainage Class [2/]	Max. Height (inch)	Maint. Level [3/]	Remarks
		lb/ac	lb/ 1000 ft^2				
COOL-SEASON GRASS MIXES							
5. SELECT TWO GRASSES:							
Creeping Red Fescue (*Festuca rubra var. rubra*)	Dawson, Pennlawn, Flyer, Fortess, Ruby, or Salem	20	0.46				Use creeping red fescue in heavy shade and on moist sites.
OR							
Hard Fescue (*Festuca trachyphylla*)	Attila or Aurora	20	0.46				Perennial ryegrass and redtop will establish more rapidly than either fescue. Redtop tolerates wet sites better than ryegrass.
Perennial Ryegrass (*Lolium perenne*)	Blazer (II), Pennfine	10	0.23	E - SP	2 - 3	B - D	
OR							
Redtop (*Agrostis gigantean*)	Streaker	1	0.02				Flatpea will suppress woody vegetation. It should be planted in the spring, or as a dormant seeding in late fall or winter. It must be incorporated into the soil or covered with mulch. It may not be winter-hardy if planted late summer - fall. Caution: Flatpea can spread aggressively, and can be toxic to livestock.
AND ADD THE FOLLOWING LEGUME:							
Flatpea (*Lathyrus sylvestris*)	Lathco	15	0.34				
6. Tall Fescue (*Lolium arundinaceum*) (*formerly Festuca arundinacea*)	Recommended MD turf-types [4/]	40	0.93				
Perennial Ryegrass (*Lolium perenne*)	Blazer (II), Pennfine	25	0.57				
PLUS ONE OF THE FOLLOWING LEGUMES:				W - SP	2 - 3	C - D	
Birdsfoot Trefoil (*Lotus corniculatus*)	Empire, Viking, Norcen, Leo	8	0.18				Birdsfoot trefoil is suitable for use only in Zones 5b and 6a.
White Clover (*Trifolium repens*)	Common	5	0.11				
7. Creeping Red Fescue (*Festuca rubra var. rubra*)	Dawson, Pennlawn, Flyer, Fortess, Ruby, or Salem	60	1.38	W - MW	1 - 2	C - D	This mix has good shade tolerance.
Kentucky Bluegrass (*Poa pratensis*)	Recommended MD turf-types [4/]	15	0.34				

Table B.3: Selected List of Permanent Herbaceous Seeding Mixtures (Continued)

Mix	Recommended Cultivar	Seeding Rate [1/]		Soil Drainage Class [2/]	Max. Height (inch)	Maint. Level [3/]	Remarks
		lb/ac	lb/ 1000 ft^2				
8. Tall Fescue (*Lolium arundinaceum*) (formerly *Festuca arundinacea*)	Recommended MD turf-types [4/]	100	2.3	E - SP	2 - 3	A - D	Tall fescue produces a dense turf if frequently mowed, but tends to be clumpy if mowed only occasionally. For best results, recommend using a blend of 3 cultivars. Use low-endophyte cultivars in areas where livestock may graze.
9. SELECT ONE SPECIES OF FESCUE:							Good for highly managed athletic fields.
Tall Fescue (*Lolium arundinaceum*) (formerly *Festuca arundinacea*)	Recommended MD turf-types [4/]	60	1.38				Tall fescue is more suitable for compacted, high use areas and on moist sites.
OR							
Hard Fescue (*Festuca trachyphylla*)	Attila or Aurora	40	0.92				Hard fescue produces finer-textured turf with more shade tolerance.
AND ADD:							
Kentucky Bluegrass (*Poa pratensis*)	Recommended MD turf-types [4/]	40	0.92	W - SP	2 - 3	A - B	Use tall fescue instead of hard fescue for wastewater treatment strips and areas.
Perennial Ryegrass (*Lolium perenne*)	Blazer (II), Pennfine	20	0.46				For best results, recommend using a blend of 3 cultivars each for tall fescue and Kentucky bluegrass.
10. Orchardgrass (*Dactylis glomerata*)	Any	25	0.57				Low maintenance mix that is easy to establish.
Creeping Red Fescue (*Festuca rubra var. rubra*)	Dawson, Pennlawn, Flyer, Fortess, Ruby, or Salem	10	0.23				
Redtop (*Agrostis gigantean*)	Streaker	1	0.02	W - SP	2 - 3	C - D	
Alsike Clover (*Trifolium hybridum*)	Common	3	0.07				Alsike clover can be toxic to horses.
White Clover (*Trifolium repens*)	Common	3	0.07				Omit the clovers if using this mix for wastewater treatment strips and areas.

Table B.3: Selected List of Permanent Herbaceous Seeding Mixtures (Continued)

Mix	Recommended Cultivar	Seeding Rate [1/]		Soil Drainage Class [2/]	Max. Height (inch)	Maint. Level [3/]	Remarks
		lb/ac	lb/ 1000 ft^2				
11. Creeping Red Fescue (*Festuca rubra var. rubra*)	Dawson, Pennlawn, Flyer, Fortess, Ruby, or Salem	30	0.69				
Chewings Fescue (*Festuca rubra ssp. commutata*)	Common	30	0.69				
Kentucky Bluegrass (*Poa pratensis*)	Recommended MD turf-types [4/]	20	0.46	E - MW	2 - 3	B - D	
OPTIONAL ADDITION							
Rough Bluegrass (*Poa trivialis*)	Common	15	0.34				Add rough bluegrass in moist, shady conditions.
12. Creeping Red Fescue (*Festuca rubra var. rubra*)	Dawson, Pennlawn, Flyer, Fortess, Ruby, or Salem	25	0.57				Attractive mix of fine fescues and wildflowers for low maintenance conditions. Once well-established, the grasses may tend to outcompete the wildflowers.
Hard Fescue (*Festuca trachyphylla*)	Attila or Aurora	25	0.57				
Sheep Fescue (*Festuca ovina*)	Common or Bighorn	25	0.57				Wildflowers are best established by broadcasting and cultipacking on a prepared seedbed. Drilling can be also used, but care must be taken so that seeds are not drilled too deep.
PLUS WILDFLOWER MIX:							
Black-eyed Susan (*Rudbeckia hirta*)	Common	2	0.05	E - MW	2 - 3	C - D	
Lance-leaved Coreopsis (*Coreopsis lanceolata*)	Common	2	0.05				Hydroseeding is not recommended for this mix if wildflowers are used. (They have very small seeds.)
Purple Coneflower (*Echinacea purpurea*)	Common	2	0.05				
Partridge Pea (*Chamaecrista fasciculate*)	Common	5	0.11				
OR ADD CLOVER MIX:							
White Clover (*Trifolium repens*)	Common	3	0.07				
Red Clover (*Trifolium pretense*)	Any	3	0.07				

Table B.3: Selected List of Permanent Herbaceous Seeding Mixtures (Continued)

Mix	Recommended Cultivar	Seeding Rate 1/		Soil Drainage Class 2/	Max. Height (inch)	Maint. Level 3/	Remarks
		lb/ac	lb/ 1000 ft^2				
13. Alkali Saltgrass (*Puccinellia distans*)	Fults or Salty	20	0.46	W - P	2 - 3	B - D	This is the recommended mix for saline sites. Saltgrass will persist only under saline conditions.
Creeping Red Fescue (*Festuca rubra var. rubra*)	Dawson	15	0.34				For best results, use only the 'Dawson' variety of creeping red fescue. It is a salt-tolerant variety.
Fowl Meadowgrass (*Poa palustris*)	Common	2	0.05				
OPTIONAL ADDITION							
Creeping Bentgrass (*Agrostis stolonifera*)	Seaside	2	0.05				Add bentgrass for wetter conditions.

Notes:

1/ Seeding Rates: Seeding rates for the warm-season grasses are in pounds of Pure Live Seed (PLS). Actual planting rates must be adjusted to reflect percent seed germination and purity, as tested. Adjustments are usually not needed for the cool-season grasses, legumes, or wildflowers. All legume seeds must be inoculated before planting with the appropriate Rhizobium bacteria. When feasible, hard-seeded legumes should be scarified to improve germination.

2/ Soil Drainage Class (refer to the county soil survey for further information):
E - Excessively Drained; W - Well Drained; MW - Moderately Well Drained; SP - Somewhat Poorly Drained; P - Poorly Drained.

3/ Maintenance Level:

A - Intensive mowing (every 2 - 4 days), fertilization, lime, insect and weed control, and watering (examples: high maintenance lawns and athletic fields).
B - Frequent mowing (every 4 - 7 days), occasional fertilization, lime, pest control, and watering (examples: residential, school, and commercial lawns).
C - Periodic mowing (every 7 - 14 days), occasional fertilization and lime (examples: residential lawns, parks).
D - Infrequent or no mowing, fertilization, or lime after the first year of establishment (examples: wildlife areas, roadsides, steep banks).

4/ Turf-type cultivars of tall fescue and Kentucky bluegrass must be selected based on recommendations of the University of Maryland Cooperative Extension Service, Agronomy Mimeo 77. Recommendations are as follows:

A. Kentucky Bluegrass –

1. The following Kentucky bluegrass cultivars are suitable for general use, and are also noted for shade tolerance:

America	**Coventry**	**Quantum Leap**
Ascot	**Liberator**	**Showcase**
Brilliant	**Moonlight**	**SR 2000**
Champagne	**Nuglade**	**Unique**
Compact	**Princeton 105**	

2. **The following Kentucky bluegrass cultivars are suitable for general use, and are also noted for tolerance of low maintenance conditions:**

Barirus	**Haga**	**Monopoly**
Caliber	**Livingston**	**Washington**
Eagleton	**Merit**	
Freedom	**Midnight**	

B. **<u>Tall Fescue</u> - The following turf-type cultivars are suitable for general use:**

Alamo E	**Bulldawg**	**Debutante**	**Good-En**	**Micro DD**	**Rebel 3D***	**Scorpio**	**Titan 2**
Apache II	**Chapel Hill**	**Dominion**	**Grande**	**Millennium**	**Rebel III***	**Shenandoah**	**Tomahawk***
Avanti*	**Chieftain II***	**Duke**	**Guardian**	**Olympic Gold**	**Rebel Jr.**	**Shenandoah II**	**Trailblazer II***
Axiom	**Chinook**	**Duster***	**Heritage**	**Oncue**	**Rebel Sentry**	**Southern Choice***	**Twilight II**
Bandana	**Cochise II**	**Eldorado***	**Houndog 5**	**Pixie**	**Red Coat**	**SR 8200**	**Virtue***
Barlexus	**Comstock**	**Empress**	**Jaguar III**	**Pixie E+**	**Regiment***	**SR 8300**	**Watchdog**
Barrington	**Coyote**	**Falcon II***	**Lancer**	**Plantation**	**Rembrandt**	**Stetson**	**Wolfpack**
Bonanza*	**Crossfire***	**Finelawn Petite***	**Leprechaun**	**Pyramid**	**Renegade**	**Tarheel**	**WPEZE**
Bonanza II	**Crossfire II**	**Genesis**	**Masterpiece**	**Rebel 2000**	**Reserve**	**TF6**	**Wyatt**

Tall fescue cultivar names that are followed by an asterisk (*) have low endophyte levels (20% or lower, based on seed analysis). To avoid livestock health problems due to endophyte toxicity, use low-endophyte cultivars for critical area plantings where livestock may be allowed to graze (e.g., heavy use grass loafing paddocks). Please note that endophyte levels in plantings can vary between varieties, between fields of the same variety, and with the time of year. For areas where livestock will not have access, cultivars with higher endophyte levels are desirable because they tend to be more drought tolerant and more resistant to disease and insect damage.

Table B.4: Quality of Seed

Species	Minimum Seed Purity (%)	Minimum Seed Germination (%)	Species	Minimum Seed Purity (%)	Minimum Seed Germination (%)
COOL-SEASON GRASSES			**WARM-SEASON GRASSES**		
Barley	98	85	Bluestem, Big	60	60
Bentgrass, Creeping	95	85	Bluestem, Little	55	60
Bluegrass, Canada	90	80	Deertongue	95	75
Bluegrass, Kentucky	97	80	Indiangrass	60	60
Bluegrass, Rough	96	80	Millet, Foxtail or Pearl	98	80
Fescue, Chewings	97	85	Panicgrass, Coastal	95	70
Fescue, Creeping Red	97	85	Switchgrass	95	75
Fescue, Hard	97	85	**LEGUMES/FORBS**		
Fescue, Sheep	97	85	Clover, Alsike	99	85
Fescue, Tall	97	85	Clover, Bush	--	--
Meadowgrass, Fowl	--	--	Clover, Red	99	85
Oats	98	85	Clover, White	98	90
Orchardgrass	90	80	Flatpea	98	75
Redtop	92	80	Indigo, Wild	--	--
Rye, Cereal	98	85	Lespedeza, Common	98	80
Ryegrass, Annual or Perennial	97	85	Lespedeza, Korean	98	80
Saltgrass, Alkali	85	80	Pea, Partridge	98	70
Wheat	98	85	Tick-Trefoil, Showy	--	--
Wild Rye, Canada	85	70	Trefoil, Birdsfoot	98	85
Wild Rye, Virginia	--	--	Wildflowers	--	--

NOTE: All seed must comply with the Maryland State Seed Law. Seed must be free of prohibited or restricted noxious weeds, as currently listed by the Maryland Department of Agriculture, Turf and Seed Section.

Table B.5: Recommended Planting Dates for Permanent Cover in Maryland [1/]

Type of Plant Material	Plant Hardiness Zones		
	5b and 6a	**6b**	**7a and 7b**
Seeds - Cool-Season Grasses (includes mixes with forbs and/or legumes)	Mar 15 to May 31 Aug 1 to Sep 30	Mar 1 to May 15 Aug 1 to Oct 15	Feb 15 to Apr 30 Aug 15 to Oct 31 Nov 1 to Nov 30♦
Seeds - Warm-Season/Cool-Season Grass Mixes (includes mixes with forbs and/or legumes)	Mar 15 to May 31♦♦ Jun 1 to Jun 15*	Mar 1 to May 15♦♦ May 16 to Jun 15*	Feb 15 to Apr 30♦♦ May 1 to May 31*
Sod - Cool-Season	Mar 15 to May 31 Jun 1 to Aug 31* Sep 1 to Nov 1*✦	Mar 1 to May 15 May 16 to Sep 14* Sep 15 to Nov 15*✦	Feb 15 to Apr 30 May 1 to Sep 30* Oct 1 to Dec 1*✦
Unrooted Woody Materials; Bare-Root Plants; Bulbs, Rhizomes, Corms, and Tubers [2/]	Mar 15 to May 31 Jun 1 to Jun 30*	Mar 1 to May 15 May 16 to Jun 30*	Feb 15 to Apr 30 May 1 to Jun 30*
Containerized Stock; Balled-and-Burlapped Stock	Mar 15 to May 31 Jun 1 to Jun 30* Sep 1 to Nov 15*✦	Mar 1 to May 15 May 16 to Jun 30* Sep 15 to Nov 30*✦	Feb 15 to Apr 30 May 1 to Jun 30* Oct 1 to Dec 15*✦

Notes:

1. **The planting dates listed are averages for each zone. These dates may require adjustment to reflect local conditions, especially near the boundaries of the zones. When seeding toward the end of the listed planting dates, or when conditions are expected to be less than optimal, select an appropriate nurse crop from Table B.1 Temporary Seeding for Site Stabilization and plant together with the permanent seeding mix.**
2. **When planted during the growing season, most of these materials must be purchased and kept in a dormant condition until planting. Bare-root grasses are the exception—they may be supplied as growing (non-dormant) plants.**

♦ **Additional planting dates for the lower Coastal Plain, dependent on annual rainfall and temperature trends. Recommend adding a nurse crop, as noted above, if planting during this period.**

♦♦ **Warm-season grasses need a soil temperature of at least 50 degrees F in order to germinate. If soil temperatures are colder than 50 degrees, or moisture is not adequate, the seeds will remain dormant until conditions are favorable. In general, planting during the latter portion of this period allows more time for weed emergence and weed control prior to planting. When selecting a planting date, consider the need for weed control vs. the likelihood of having sufficient moisture for later plantings, especially on droughty sites.**

* **Additional planting dates during which supplemental watering may be needed to ensure plant establishment.**

✦ **Frequent freezing and thawing of wet soils may result in frost-heaving of materials planted in late fall, if plants have not sufficiently rooted in place. Sod usually needs 4 to 6 weeks to become sufficiently rooted. Large containerized and balled-and-burlapped stock may be planted into the winter months as long as the ground is not frozen and soil moisture is adequate.**

Table B.6: Maintenance Fertilization for Permanent Seeding

Seeding Mixture	Type	lb/ac	lb/1000 sf	Time	Mowing
Tall fescue makes up 70 percent or more of cover.	10-10-10 or 30-10-10	500 400	11.5 9.2	Yearly or as needed. Fall	Not closer than 3 inches, if occasional mowing is desired.
Birdsfoot Trefoil.	0-20-0	400	9.2	Spring, the year following establishment, and every 4 to 5 years, thereafter.	Mow no closer than 2 inches.
Fairly uniform stand of tall fescue or birdsfoot trefoil.	5-10-10	500	11.5	Fall, the year following establishment, and every 4 to 5 years, thereafter.	Not required, no closer than 4 inches in the fall after seed has matured.
Weeping lovegrass fairly uniform plant distribution.	5-10-10	500	11.5	Spring, the year following establishment, and every 3 to 4 years, thereafter.	Not required, not closer than 4 inches in fall after seed has matured.
Red & chewings fescue, Kentucky bluegrass, hard fescue mixtures.	20-10-10	250 100	5.8 2.3	September, 30 days later. December, May 20, June 30, if needed.	Mow no closer than 2 inches for red fescue and Kentucky bluegrass, 3 inches for fescue.

B-4-6 STANDARDS AND SPECIFICATIONS

FOR

SOIL STABILIZATION MATTING

Definition

Material used to temporarily or permanently stabilize channels or steep slopes until groundcover is established.

Purpose

To protect the soils until vegetation is established.

Conditions Where Practice Applies

On newly seeded surfaces to prevent the applied seed from washing out; in channels and on steep slopes where the flow has erosive velocities or conveys clear water; on temporary swales, earth dikes, and perimeter dike swales as required by the respective design standard; and, on stream banks where moving water is likely to wash out new vegetative plantings.

Design Criteria

1. The soil stabilization matting that is used must withstand the flow velocities and shear stresses determined for the area, based on the 2-year, 24-hour frequency storm for temporary applications and the 10-year, 24-hour frequency storm for permanent applications. Designate on the plan the type of soil stabilization matting using the standard symbol and include the calculated shear stress for the respective treatment area.
2. Matting is required on permanent channels where the runoff velocity exceeds two and half feet per second (2.5 fps) or the shear stress exceeds two pounds per square foot (2 lbs/ft^2). On temporary channels discharging to a sediment trapping practice, provide matting where the runoff velocity exceeds four feet per second (4 fps).
3. Temporary soil stabilization matting is made with degradable (lasts 6 months minimum), natural, or manmade fibers of uniform thickness and distribution of fibers throughout and is smolder resistant. The maximum permissible velocity for temporary matting is 6 feet per second.
4. Permanent soil stabilization matting is an open weave, synthetic material consisting of non-degradable fibers or elements of uniform thickness and distribution of weave throughout. The maximum permissible velocity for permanent matting is 8.5 feet per second.
5. Calculate channel velocity and shear stress using the following procedure:

   Shear Stress (τ) is a measure of the force of moving water against the substrate and is calculated as:

   $\tau = \gamma \cdot R \cdot S_w$ where:

   τ = shear stress (lb/ft^2)
   γ = weight density of water (62.4 lb/ft^3)
   R = average water depth (hydraulic radius) (ft)
   S_w = water surface slope (ft/ft)

Velocity (v) measures the rate of flow through a defined area and is calculated as:

$$v = \frac{1.486 R^{2/3} s^{1/2}}{n}$$

where:

v = velocity (ft/sec)
n = Manning's roughness coefficient
R = hydraulic radius (ft)
s = channel slope (ft/ft)

6. Use Table B.7 to assist in selecting the appropriate soil stabilization matting for slope applications based on the slope, the slope length, and the soil-erodibility K factor.

Table B.7: Soil Stabilization on Slopes

Slope	**20:1 or Flatter** (≤5%)			**<20:1 to 4:1 (>5 - 25%)**			**<4:1 to 3:1 (>25 - 33%)**			**<3:1 to 2.5:1 (>33 - 40%)**			**<2.5:1 to 2:1** (>40 - 50%)**		
Slope Length (feet)*	0-30	30-60	60-120	0-30	30-60	60-120	0-30	30-60	60-120	0-30	30-60	60-120	0-30	30-60	60-120
Straw Mulch/Wood Cellulose Fiber				**for K ≤ 0.35*** **											
Temporary Matting with Design Shear Stress ≥ 1.5 lb/sf															
Temporary Matting with Design Shear Stress ≥ 1.75 lb/sf															
Temporary Matting with Design Shear Stress ≥ 2.0 lb/sf															
Temporary Matting with Design Shear Stress ≥ 2.25 lb/sf															

Effective range for all K values unless otherwise specified

* Slope length includes contributing flow length.
** Slopes steeper than 2:1 must be engineered.
*** Soil having a K value less than or equal to 0.35 can be stabilized effectively with straw mulch or wood cellulose fiber when located on slopes steeper than 5%. Soil stabilization matting is required on all slopes steeper than 5% that have soil with a K factor greater than 0.35. K factor ratings are published in the NRCS Soil Survey http:// websoilsurvey.nrcs.usda.gov/app. During construction or reclamation, the soil-erodibility K value should represent the upper 6 inches of the final fill material re-spread as the last lift. Only the effects of rock fragments within the soil profile are considered in the estimation of the K value. Do not adjust K values to account for rocks on the soil surface or increases in soil organic matter related to management activities.

Maintenance

Vegetation must be established and maintained so that the requirements for Adequate Vegetative Establishment are continuously met in accordance with Section B-4 Vegetative Stabilization.

DETAIL B-4-6-A TEMPORARY SOIL STABILIZATION MATTING CHANNEL APPLICATION

STANDARD SYMBOL

TSSMC – * lb/ft²
(* INCLUDE SHEAR STRESS)

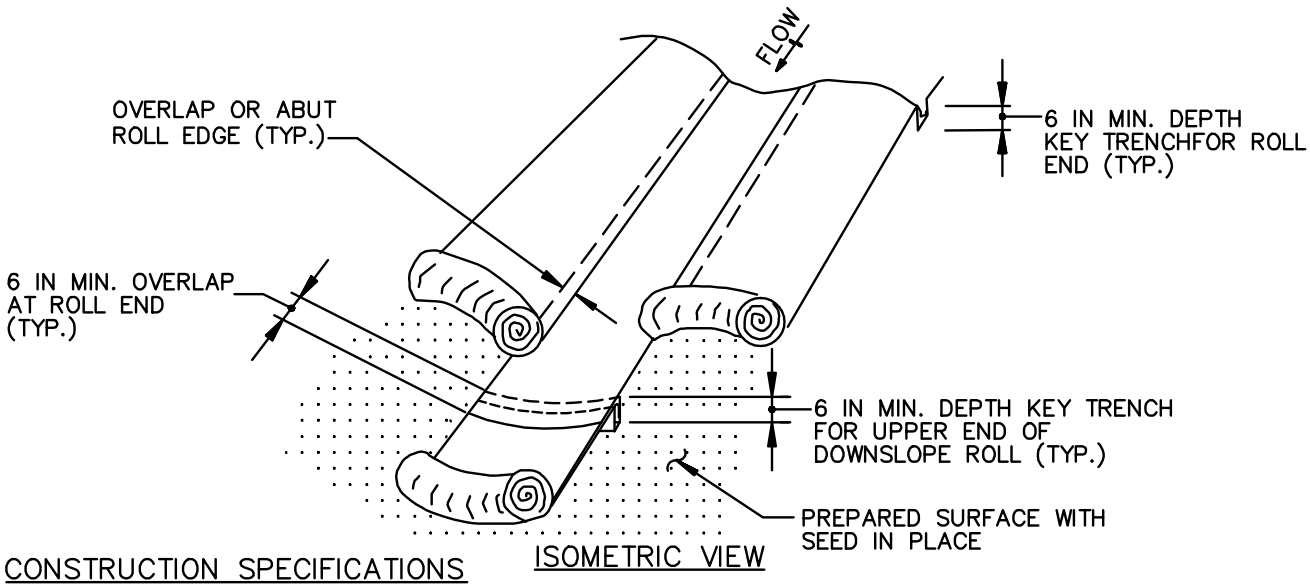

ISOMETRIC VIEW

CONSTRUCTION SPECIFICATIONS

1. USE MATTING THAT HAS A DESIGN VALUE FOR SHEAR STRESS EQUAL TO OR HIGHER THAN THE SHEAR STRESS DESIGNATED ON APPROVED PLANS.

2. USE TEMPORARY SOIL STABILIZATION MATTING MADE OF DEGRADABLE (LASTS 6 MONTHS MINIMUM) NATURAL OR MAN–MADE FIBERS (MOSTLY ORGANIC). MAT MUST HAVE UNIFORM THICKNESS AND DISTRIBUTION OF FIBERS THROUGHOUT AND BE SMOLDER RESISTANT. CHEMICALS USED IN THE MAT MUST BE NON–LEACHING AND NON–TOXIC TO VEGETATION AND SEED GERMINATION AND NON–INJURIOUS TO THE SKIN. IF PRESENT, NETTING MUST BE EXTRUDED PLASTIC WITH A MAXIMUM MESH OPENING OF 2x2 INCHES AND SUFFICIENTLY BONDED OR SEWN ON 2 INCH CENTERS ALONG LONGITUDINAL AXIS OF THE MATERIAL TO PREVENT SEPARATION OF THE NET FROM THE PARENT MATERIAL.

3. SECURE MATTING USING STEEL STAPLES, WOOD STAKES, OR BIODEGRADABLE EQUIVALENT. STAPLES MUST BE "U" OR "T" SHAPED STEEL WIRE HAVING A MINIMUM GAUGE OF NO. 11 AND NO. 8 RESPECTIVELY. "U" SHAPED STAPLES MUST AVERAGE 1 TO 1½ INCHES WIDE AND BE A MINIMUM OF 6 INCHES LONG. "T" SHAPED STAPLES MUST HAVE A MINIMUM 8 INCH MAIN LEG, A MINIMUM 1 INCH SECONDARY LEG, AND A MINIMUM 4 INCH HEAD. WOOD STAKES MUST BE ROUGH–SAWN HARDWOOD, 12 TO 24 INCHES IN LENGTH, 1x3 INCH IN CROSS SECTION, AND WEDGE SHAPED AT THE BOTTOM.

4. PERFORM FINAL GRADING, TOPSOIL APPLICATION, SEEDBED PREPARATION, AND PERMANENT SEEDING IN ACCORDANCE WITH SPECIFICATIONS. PLACE MATTING WITHIN 48 HOURS OF COMPLETING SEEDING OPERATIONS UNLESS END OF WORKDAY STABILIZATION IS SPECIFIED ON THE APPROVED EROSION AND SEDIMENT CONTROL PLAN.

5. UNROLL MATTING IN DIRECTION OF WATER FLOW, CENTERING THE FIRST ROLL ON THE CHANNEL CENTERLINE. WORK FROM CENTER OF CHANNEL OUTWARD WHEN PLACING ROLLS. LAY MAT SMOOTHLY AND FIRMLY ON THE SEEDED SURFACE. AVOID STRETCHING THE MATTING.

6. KEY–IN UPSTREAM END OF EACH MAT ROLL BY DIGGING A 6 INCH (MINIMUM) TRENCH AT THE UPSTREAM END OF THE MATTING, PLACING THE ROLL END IN THE TRENCH, STAPLING THE MAT IN PLACE, REPLACING THE EXCAVATED MATERIAL, AND TAMPING TO SECURE THE MAT END.

7. OVERLAP OR ABUT THE ROLL EDGES PER MANUFACTURER RECOMMENDATIONS. OVERLAP ROLL ENDS BY 6 INCHES (MINIMUM), WITH THE UPSTREAM MAT OVERLAPPING ON TOP OF THE NEXT DOWNSTREAM MAT.

8. STAPLE/STAKE MAT IN A STAGGERED PATTERN ON 4 FOOT (MAXIMUM) CENTERS THROUGHOUT AND 2 FOOT (MAXIMUM) CENTERS ALONG SEAMS, JOINTS, AND ROLL ENDS.

9. ESTABLISH AND MAINTAIN VEGETATION SO THAT REQUIREMENTS FOR ADEQUATE VEGETATIVE ESTABLISHMENT ARE CONTINUOUSLY MET IN ACCORDANCE WITH SECTION B–4 VEGETATIVE STABILIZATION.

DETAIL B-4-6-B TEMPORARY SOIL STABILIZATION MATTING SLOPE APPLICATION

STANDARD SYMBOL

TSSMS – * lb/ft²
(* INCLUDE SHEAR STRESS)

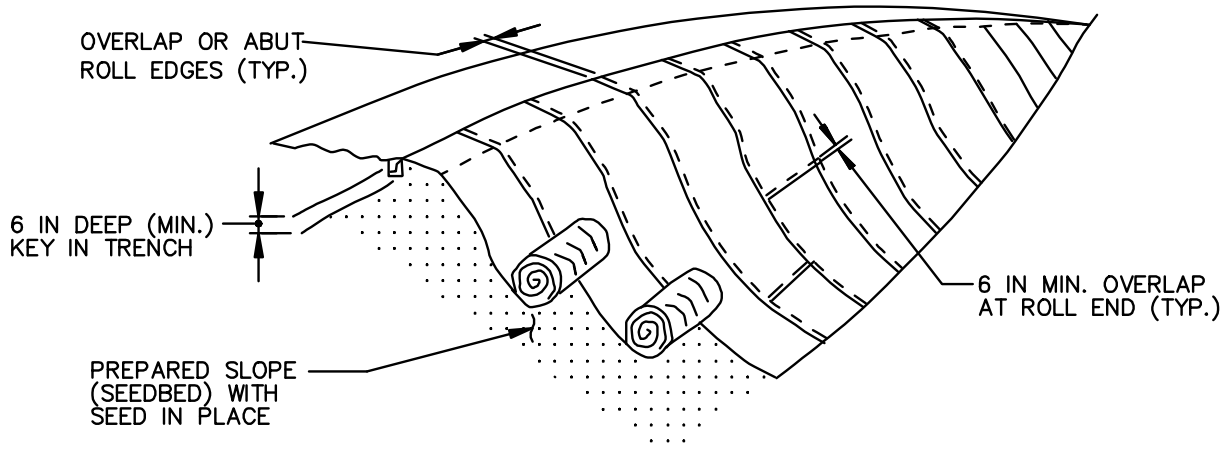

ISOMETRIC VIEW

CONSTRUCTION SPECIFICATIONS

1. USE MATTING THAT HAS A DESIGN VALUE FOR SHEAR STRESS EQUAL TO OR HIGHER THAN THE SHEAR STRESS DESIGNATED ON APPROVED PLANS.

2. USE TEMPORARY SOIL STABILIZATION MATTING MADE OF DEGRADABLE (LASTS 6 MONTHS MINIMUM) NATURAL OR MAN–MADE FIBERS (MOSTLY ORGANIC). MAT MUST HAVE UNIFORM THICKNESS AND DISTRIBUTION OF FIBERS THROUGHOUT AND BE SMOLDER RESISTANT. CHEMICALS USED IN THE MAT MUST BE NON–LEACHING AND NON–TOXIC TO VEGETATION AND SEED GERMINATION AND NON–INJURIOUS TO THE SKIN. IF PRESENT, NETTING MUST BE EXTRUDED PLASTIC WITH A MAXIMUM MESH OPENING OF 2x2 INCHES AND SUFFICIENTLY BONDED OR SEWN ON 2 INCH CENTERS ALONG LONGITUDINAL AXIS OF THE MATERIAL TO PREVENT SEPARATION OF THE NET FROM THE PARENT MATERIAL.

3. SECURE MATTING USING STEEL STAPLES, WOOD STAKES, OR BIODEGRADABLE EQUIVALENT. STAPLES MUST BE "U" OR "T" SHAPED STEEL WIRE HAVING A MINIMUM GAUGE OF NO. 11 AND NO. 8 RESPECTIVELY. "U" SHAPED STAPLES MUST AVERAGE 1 TO 1½ INCHES WIDE AND BE A MINIMUM OF 6 INCHES LONG. "T" SHAPED STAPLES MUST HAVE A MINIMUM 8 INCH MAIN LEG, A MINIMUM 1 INCH SECONDARY LEG, AND A MINIMUM 4 INCH HEAD. WOOD STAKES MUST BE ROUGH–SAWN HARDWOOD, 12 TO 24 INCHES IN LENGTH, 1x3 INCH IN CROSS SECTION, AND WEDGE SHAPED AT THE BOTTOM.

4. PERFORM FINAL GRADING, TOPSOIL APPLICATION, SEEDBED PREPARATION, AND PERMANENT SEEDING IN ACCORDANCE WITH SPECIFICATIONS. PLACE MATTING WITHIN 48 HOURS OF COMPLETING SEEDING OPERATIONS UNLESS END OF WORKDAY STABILIZATION IS SPECIFIED ON THE APPROVED EROSION & SEDIMENT CONTROL PLAN.

5. UNROLL MATTING DOWNSLOPE. LAY MAT SMOOTHLY AND FIRMLY UPON THE SEEDED SURFACE. AVOID STRETCHING THE MATTING.

6. OVERLAP OR ABUT ROLL EDGES PER MANUFACTURER RECOMMENDATIONS. OVERLAP ROLL ENDS BY 6 INCHES (MINIMUM), WITH THE UPSLOPE MAT OVERLAPPING ON TOP OF THE DOWNSLOPE MAT.

7. KEY IN THE UPSLOPE END OF MAT 6 INCHES (MINIMUM) BY DIGGING A TRENCH, PLACING THE MATTING ROLL END IN THE TRENCH, STAPLING THE MAT IN PLACE, REPLACING THE EXCAVATED MATERIAL, AND TAMPING TO SECURE THE MAT END IN THE KEY.

8. STAPLE/STAKE MAT IN A STAGGERED PATTERN ON 4 FOOT (MAXIMUM) CENTERS THROUGHOUT AND 2 FOOT (MAXIMUM) CENTERS ALONG SEAMS, JOINTS, AND ROLL ENDS.

9. ESTABLISH AND MAINTAIN VEGETATION SO THAT REQUIREMENTS FOR ADEQUATE VEGETATIVE ESTABLISHMENT ARE CONTINUOUSLY MET IN ACCORDANCE WITH SECTION B–4 VEGETATIVE STABILIZATION.

DETAIL B-4-6-C PERMANENT SOIL STABILIZATION MATTING CHANNEL APPLICATION

STANDARD SYMBOL

PSSMC – * lb/ft²
(* INCLUDE SHEAR STRESS)

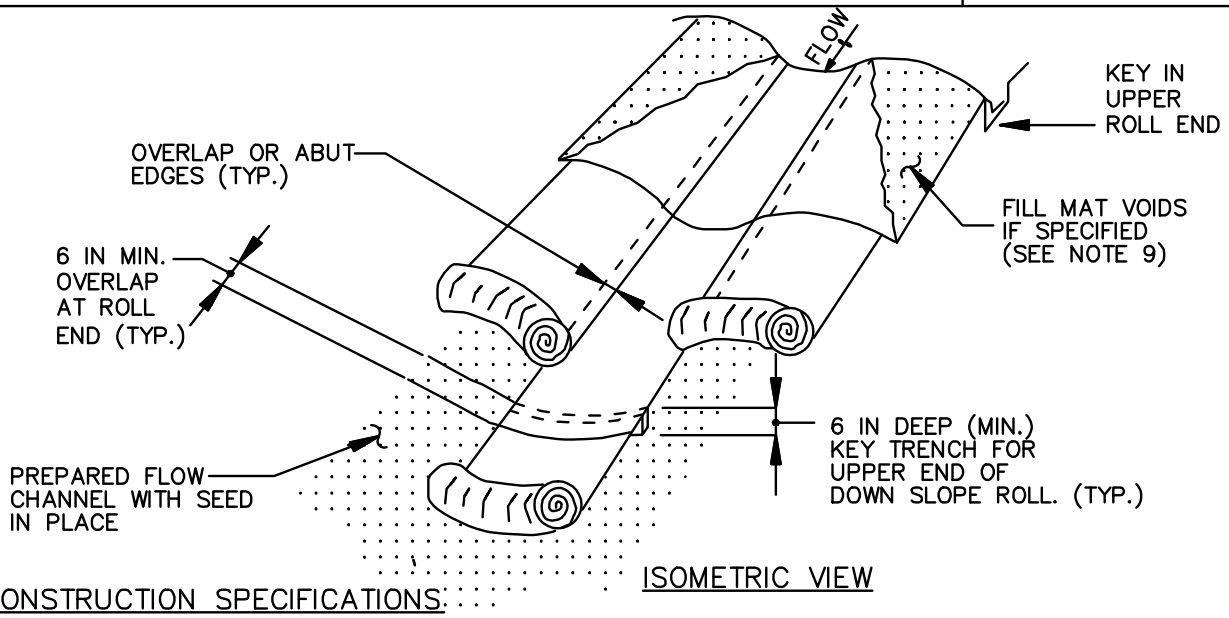

CONSTRUCTION SPECIFICATIONS:

1. USE MATTING THAT HAS A DESIGN VALUE FOR SHEAR STRESS EQUAL TO OR HIGHER THAN THE SHEAR STRESS DESIGNATED ON APPROVED PLANS.

2. USE PERMANENT SOIL STABILIZATION MATTING MADE OF OPEN WEAVE SYNTHETIC, NON–DEGRADABLE FIBERS OR ELEMENTS OF UNIFORM THICKNESS AND DISTRIBUTION THROUGHOUT. CHEMICALS USED IN THE MAT MUST BE NON–LEACHING AND NON–TOXIC TO VEGETATION AND SEED GERMINATION AND NON–INJURIOUS TO THE SKIN. IF PRESENT, NETTING MUST BE EXTRUDED PLASTIC WITH A MAXIMUM MESH OPENING OF 2x2 INCHES AND SUFFICIENTLY BONDED OR SEWN ON 2 INCH CENTERS ALONG LONGITUDINAL AXIS OF THE MATERIAL TO PREVENT SEPARATION OF THE NET FROM THE PARENT MATERIAL.

3. SECURE MATTING USING STEEL STAPLES OR WOOD STAKES. STAPLES MUST BE "U" OR "T" SHAPED STEEL WIRE HAVING A MINIMUM GAUGE OF NO. 11 AND NO. 8 RESPECTIVELY. "U" SHAPED STAPLES MUST AVERAGE 1 TO 1 ½ INCHES WIDE AND BE A MINIMUM OF 6 INCHES LONG. "T" SHAPED STAPLES MUST HAVE A MINIMUM 8 INCH MAIN LEG, A MINIMUM 1 INCH SECONDARY LEG, AND MINIMUM 4 INCH HEAD. WOOD STAKES MUST BE ROUGH–SAWN HARDWOOD, 12 TO 24 INCHES IN LENGTH, 1x3 INCH IN CROSS SECTION, AND WEDGE SHAPE AT THE BOTTOM.

4. PERFORM FINAL GRADING, TOPSOIL APPLICATION, SEEDBED PREPARATION, AND PERMANENT SEEDING IN ACCORDANCE WITH SPECIFICATIONS. PLACE MATTING WITHIN 48 HOURS OF COMPLETING SEEDING OPERATIONS, UNLESS END OF WORKDAY STABILIZATION IS SPECIFIED ON THE APPROVED EROSION AND SEDIMENT CONTROL PLAN.

5. UNROLL MATTING IN DIRECTION OF WATER FLOW, CENTERING THE FIRST ROLL ON THE CHANNEL CENTER LINE. WORK FROM CENTER OF CHANNEL OUTWARD WHEN PLACING ROLLS. LAY MATTING SMOOTHLY AND FIRMLY UPON THE SEEDED SURFACE. AVOID STRETCHING THE MATTING.

6. OVERLAP OR ABUT EDGES OF MATTING ROLLS PER MANUFACTURER RECOMMENDATIONS. OVERLAP ROLL ENDS BY 6 INCHES (MINIMUM), WITH THE UPSTREAM MAT OVERLAPPING ON TOP OF THE NEXT DOWNSTREAM MAT.

7. KEY IN THE TOP OF SLOPE END OF MAT 6 INCHES (MINIMUM) BY DIGGING A TRENCH, PLACING THE MATTING ROLL END IN THE TRENCH, STAPLING THE MAT IN PLACE, REPLACING THE EXCAVATED MATERIAL, AND TAMPING TO SECURE THE MAT END IN THE KEY.

8. STAPLE/STAKE MAT IN A STAGGERED PATTERN ON 4 FOOT (MAXIMUM) CENTERS THROUGHOUT AND 2 FOOT (MAXIMUM) CENTERS ALONG SEAMS, JOINTS, AND ROLL ENDS.

9. IF SPECIFIED BY THE DESIGNER OR MANUFACTURER AND DEPENDING ON THE TYPE OF MAT BEING INSTALLED, ONCE THE MATTING IS KEYED AND STAPLED IN PLACE, FILL THE MAT VOIDS WITH TOP SOIL OR GRANULAR MATERIAL AND LIGHTLY COMPACT OR ROLL TO MAXIMIZE SOIL/MAT CONTACT WITHOUT CRUSHING MAT.

10. ESTABLISH AND MAINTAIN VEGETATION SO THAT REQUIREMENTS FOR ADEQUATE VEGETATIVE ESTABLISHMENT ARE CONTINUOUSLY MET IN ACCORDANCE WITH SECTION B–4 VEGETATIVE STABILIZATION.

DETAIL B-4-6-D PERMANENT SOIL STABILIZATION MATTING SLOPE APPLICATION

STANDARD SYMBOL

PSSMS – * lb/ft²
(* INCLUDE SHEAR STRESS)

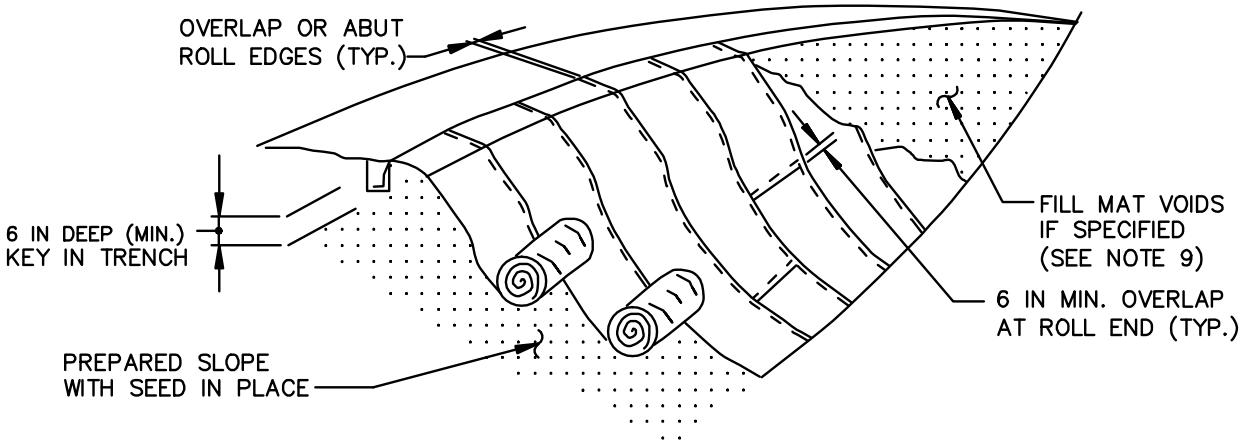

ISOMETRIC VIEW

CONSTRUCTION SPECIFICATIONS

1. USE MATTING THAT HAS A DESIGN VALUE FOR SHEAR STRESS EQUAL TO OR HIGHER THAN THE SHEAR STRESS DESIGNATED ON APPROVED PLANS.

2. USE PERMANENT SOIL STABILIZATION MATTING MADE OF OPEN WEAVE SYNTHETIC, NON–DEGRADABLE FIBERS OR ELEMENTS OF UNIFORM THICKNESS AND DISTRIBUTION THROUGHOUT. CHEMICALS USED IN THE MAT MUST BE NON–LEACHING AND NON–TOXIC TO VEGETATION AND SEED GERMINATION AND NON–INJURIOUS TO THE SKIN. IF PRESENT, NETTING MUST BE EXTRUDED PLASTIC WITH A MAXIMUM MESH OPENING OF 2x2 INCHES AND SUFFICIENTLY BONDED OR SEWN ON 2 INCH CENTERS ALONG LONGITUDINAL AXIS OF THE MATERIAL TO PREVENT SEPARATION OF THE NET FROM THE PARENT MATERIAL.

3. SECURE MATTING USING STEEL STAPLES OR WOOD STAKES. STAPLES MUST BE "U" OR "T" SHAPED STEEL WIRE HAVING A MINIMUM GAUGE OF NO. 11 AND NO. 8 RESPECTIVELY. "U" SHAPED STAPLES MUST AVERAGE 1 TO 1½ INCHES WIDE AND BE A MINIMUM OF 6 INCHES LONG. "T" SHAPED STAPLES MUST HAVE A MINIMUM 8 INCH MAIN LEG, A MINIMUM 1 INCH SECONDARY LEG, AND MINIMUM 4 INCH HEAD. WOOD STAKES MUST BE ROUGH–SAWN HARDWOOD, 12 TO 24 INCHES IN LENGTH, 1x3 INCH IN CROSS SECTION, AND WEDGE SHAPE AT THE BOTTOM.

4. PERFORM FINAL GRADING, TOPSOIL APPLICATION, SEEDBED PREPARATION, AND PERMANENT SEEDING IN ACCORDANCE WITH SPECIFICATIONS. PLACE MATTING WITHIN 48 HOURS OF COMPLETING SEEDING OPERATIONS, UNLESS END OF WORKDAY STABILIZATION IS SPECIFIED ON THE APPROVED EROSION AND SEDIMENT CONTROL PLAN.

5. UNROLL MATTING DOWN SLOPE. LAY MATTING SMOOTHLY AND FIRMLY UPON THE SEEDED SURFACE. AVOID STRETCHING THE MATTING.

6. OVERLAP OR ABUT EDGES OF MATTING ROLLS PER MANUFACTURER RECOMMENDATIONS. OVERLAP ROLL ENDS BY 6 INCHES (MINIMUM), WITH THE UPSTREAM MAT OVERLAPPING ON TOP OF THE DOWNSLOPE MAT.

7. KEY IN THE TOP OF SLOPE END OF MAT 6 INCHES (MINIMUM) BY DIGGING A TRENCH, PLACING THE MATTING ROLL END IN THE TRENCH, STAPLING THE MAT IN PLACE, REPLACING THE EXCAVATED MATERIAL, AND TAMPING TO SECURE THE MAT END IN THE KEY.

8. STAPLE/STAKE MAT IN A STAGGERED PATTERN ON 4 FOOT (MAXIMUM) CENTERS THROUGHOUT AND 2 FOOT (MAXIMUM) CENTERS ALONG SEAMS, JOINTS, AND ROLL ENDS.

9. IF SPECIFIED BY THE DESIGNER OR MANUFACTURER AND DEPENDING ON THE TYPE OF MAT BEING INSTALLED, ONCE THE MATTING IS KEYED AND STAPLED IN PLACE, FILL THE MAT VOIDS WITH TOP SOIL OR GRANULAR MATERIAL AND LIGHTLY COMPACT OR ROLL TO MAXIMIZE SOIL/MAT CONTACT WITHOUT CRUSHING MAT.

10. ESTABLISH AND MAINTAIN VEGETATION SO THAT REQUIREMENTS FOR ADEQUATE VEGETATIVE ESTABLISHMENT ARE CONTINUOUSLY MET IN ACCORDANCE WITH SECTION B–4 VEGETATIVE STABILIZATION.

B-4-7 STANDARDS AND SPECIFICATIONS

FOR

HEAVY USE AREA PROTECTION

Definition

The stabilization of areas frequently and intensively used by surfacing with suitable materials (e.g., mulch and aggregate).

Purpose

To provide a stable, non-eroding surface for areas frequently used and to improve the water quality from the runoff of these areas.

Conditions Where Practice Applies

This practice applies to intensively used areas (e.g., equipment and material storage, staging areas, heavily used travel lanes).

Criteria

1. A minimum 4-inch base course of crushed stone or other suitable materials including wood chips over nonwoven geotextile should be provided as specified in Section H-1 Materials.
2. Select the stabilizing material based on the intended use, desired maintenance frequency, and runoff control.
3. The transport of sediments, nutrients, oils, chemicals, particulate matter associated with vehicular traffic and equipment, and material storage needs to be considered in the selection of material. Additional control measures may be necessary to control some of these potential pollutants.
4. Surface erosion can be a problem on large heavy use areas. In these situations, measures to reduce the flow length of runoff or erosive velocities need to be considered.

Maintenance

The heavy use areas must be maintained in a condition that minimizes erosion. This may require adding suitable material, as specified on the approved plans, to maintain a clean surface.

B-4-8 STANDARDS AND SPECIFICATIONS

FOR

STOCKPILE AREA

Definition

A mound or pile of soil protected by appropriately designed erosion and sediment control measures.

Purpose

To provide a designated location for the temporary storage of soil that controls the potential for erosion, sedimentation, and changes to drainage patterns.

Conditions Where Practice Applies

Stockpile areas are utilized when it is necessary to salvage and store soil for later use.

Criteria

1. The stockpile location and all related sediment control practices must be clearly indicated on the erosion and sediment control plan.
2. The footprint of the stockpile must be sized to accommodate the anticipated volume of material and based on a side slope ratio no steeper than 2:1. Benching must be provided in accordance with Section B-3 Land Grading.
3. Runoff from the stockpile area must drain to a suitable sediment control practice.
4. Access the stockpile area from the upgrade side.
5. Clear water runoff into the stockpile area must be minimized by use of a diversion device such as an earth dike, temporary swale or diversion fence. Provisions must be made for discharging concentrated flow in a non-erosive manner.
6. Where runoff concentrates along the toe of the stockpile fill, an appropriate erosion/sediment control practice must be used to intercept the discharge.
7. Stockpiles must be stabilized in accordance with the 3/7 day stabilization requirement as well as Standard B-4-1 Incremental Stabilization and Standard B-4-4 Temporary Stabilization.
8. If the stockpile is located on an impervious surface, a liner should be provided below the stockpile to facilitate cleanup. Stockpiles containing contaminated material must be covered with impermeable sheeting.

Maintenance

The stockpile area must continuously meet the requirements for Adequate Vegetative Establishment in accordance with Section B-4 Vegetative Stabilization. Side slopes must be maintained at no steeper than a 2:1 ratio. The stockpile area must be kept free of erosion. If the vertical height of a stockpile exceeds 20 feet for 2:1 slopes, 30 feet for 3:1 slopes, or 40 feet for 4:1 slopes, benching must be provided in accordance with Section B-3 Land Grading.

SECTION C - WATER CONVEYANCE

C-1 STANDARDS AND SPECIFICATIONS

FOR

EARTH DIKE

Definition

A temporary berm or ridge of soil, compacted, stabilized, and located in such a manner as to direct water to a desired location.

Purpose

To direct sediment-laden runoff to a sediment trapping practice or to intercept and divert clear water away from disturbed areas.

Conditions Where Practice Applies

Along the limit of disturbance (LOD) or across disturbed areas. Generally, earth dikes remain in place until the disturbed contributory drainage areas are permanently stabilized.

Appropriate uses of earth dikes include the following:

1. To divert sediment-laden runoff from a disturbed area to a sediment trapping practice.

2. To segment drainage areas to reduce acreage to sediment control practices.

3. To divert clear water from an undisturbed area to a stabilized outlet at non-erosive velocity.

There are two standard sizes of earth dikes and three types of flow channel stabilization.

Design Criteria

Table C.1: Earth Dike Design Criteria

	Dike A	**Dike B**
Drainage Area	(See Table C.2)	(See Table C.2)
Slope (of dike)	(See Table C.2)	(See Table C.2)
Dike Height (a)	18 inches	30 inches
Dike Width (b)	24 inches	36 inches
Flow Width (c)	4 feet	6 feet
Flow Depth in Channel (d)	12 inches	24 inches
Side Slopes	2:1 or flatter	2:1 or flatter

Design Criteria (continued)

Flow Channel Stabilization

1	Seed with straw mulch and tack.
2	Seed with soil stabilization matting or sod.
3	Four (4) to seven (7) inch stone or equivalent recycled concrete pressed flush a minimum of seven (7) inches into ground.

1. Determine the longitudinal slopes of the earth dike. Determine the drainage area to various design points along the proposed earth dike alignment.

2. Design points are located where changes in slope and/or increases in drainage area may alter the type and stabilization of earth dike.

3. Use Table C.2 to select the appropriate earth dike type (A or B) and flow channel stabilization (1, 2, or 3) for the earth dike alignment between the design points. **Flow channel stabilization 1 (seed and mulch) is not allowed for diverting clear water.**

4. Review the slopes along the earth dike alignment between the design points to ensure that the slope/drainage area relationship does not exceed the selected flow channel stabilization.

5. Maintain positive drainage along the entire length of the earth dike. Spot elevations must be provided for earth dikes having longitudinal slopes flatter than 1%.

6. For drainage areas other than specified in Table C.2, an engineering design is required.

7. Show earth dike type (A or B) and flow channel stabilization (1, 2, or 3) on the plans using the standard symbol and A-1 or B-3, etc. Place designation (e.g., A-1) on flow channel side of dike. Earth dike type and stabilization may vary along the dike's length.

8. Discharge velocities from an earth dike must be non-erosive.

9. Where an earth dike is used to convey runoff from disturbed areas, the discharge must be to a sediment control practice suitable for concentrated flow. Silt fence and super silt fence are unacceptable for receiving discharges from earth dikes.

10. Where an earth dike is used to convey clear water runoff, the discharge must be to an undisturbed, stable area at a non-erosive velocity (4 fps); otherwise, provide outlet protection.

11. When an earth dike is used in conjunction with a sediment trapping device, sequence construction so that the earth dike installation follows completion of the sediment trapping device(s).

Table C.2: Earth Dike Selection

	Drainage Area (acres)									
Slope % **	**1**	**2**	**3**	**4**	**5**	**6**	**7**	**8**	**9**	**10**
1	SEED &	MULCH	4					**B-2**		
2	**A-1**	4	SEED	AND						
3			SOIL	STABILI	ZATION	MATT	ING	6	6	6
4	4*		**A-2**	OR	SOD		6			
5					6	6			**B-3**	
6				6		4 TO 7	INCH	STONE		
7			6							
8						**A-3**				
9										
10		6								

"A" Dike

"B" Dike

*Velocity of discharge in feet per second
** For earth dike slopes steeper than 10 percent refer to Section D - Erosion Control

Notes:
If the slope of the earth dike or drainage area to the dike falls between values on Table C.2, round to the next higher slope or drainage area.

A-1 earth dikes are <u>not</u> allowed for diverting clear water.

<u>Stabilization</u>

A-1: Seed with mulch and tack

A-2/B-2: Seed and soil stabilization matting or sod

A-3/B-3: 4 to 7 inch stone pressed flush into ground a minimum of 7 inches

Engineering Design Criteria

An engineering design may preempt the use of Table C.2. Use the two year frequency storm with NRCS methodologies (i.e., TR-55, TR-20), assuming the worst soil cover conditions to prevail in the contributing drainage area over the life of the earth dike. Use Manning's Equation to determine earth dike flow channel velocities associated with the developed discharges. The Manning's roughness coefficients to be used in the equation are 0.025 for seed and mulch and 0.03 for soil stabilization matting or sod. For 4 to 7 inch stone use 0.045 for flow depths up to 1 foot and 0.038 for flow depths between 1 and 2 feet. The allowable flow channel velocities are < 4 fps for seed and mulch, < 6 fps for stabilization matting or sod, and < 8 fps for 4 to 7 inch stone.

Maintenance

The line, grade, and cross section must be maintained. Accumulated sediment and debris must be removed and positive drainage maintained. The earth dike and point of discharge must be kept free of erosion and continuously meet the requirements for Adequate Vegetative Establishment in accordance with Section B-4 Vegetative Stabilization.

DETAIL C-1 EARTH DIKE

STANDARD SYMBOL
A–1
PLACE DESIGNATION (e.g. A–1) ON FLOW CHANNEL SIDE OF DIKE.

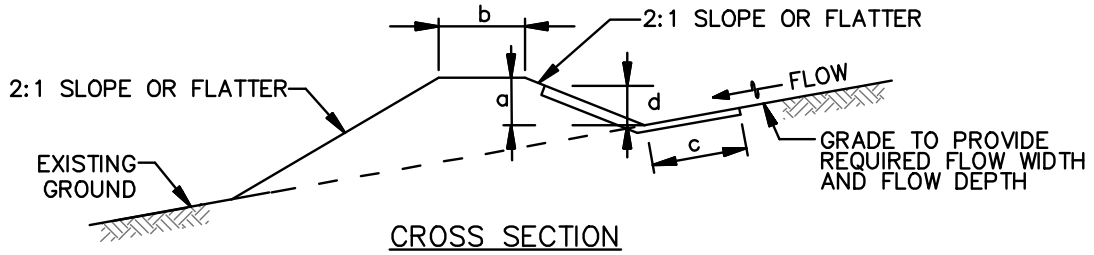

CROSS SECTION

CONTINUOUS GRADE
0.5% MIN. TO 10% MAX. SLOPE

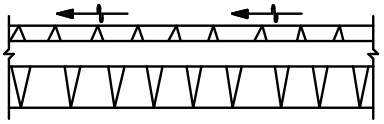

PLAN VIEW

	DIKE TYPE A	DIKE TYPE B
a – DIKE HEIGHT	18 IN MIN.	30 IN MIN.
b – DIKE WIDTH	24 IN MIN.	36 IN MIN.
c – FLOW WIDTH	4 FT MIN.	6 FT MIN.
d – FLOW DEPTH	12 IN MIN.	24 IN MIN.

FLOW CHANNEL STABILIZATION

A–1	SEED WITH STRAW MULCH AND TACK. (NOT ALLOWED FOR CLEAR WATER DIVERSION.)
A–2/B–2	SEED WITH SOIL STABILIZATION MATTING OR LINE WITH SOD.
A–3/B–3	4 TO 7 INCH STONE OR EQUIVALENT RECYCLED CONCRETE PRESSED INTO SOIL A MINIMUM OF 7 INCHES AND FLUSH WITH GROUND.

CONSTRUCTION SPECIFICATIONS

1. REMOVE AND DISPOSE OF ALL TREES, BRUSH, STUMPS, OBSTRUCTIONS, AND OTHER OBJECTIONABLE MATERIAL SO AS NOT TO INTERFERE WITH PROPER FUNCTION OF EARTHDIKE.
2. EXCAVATE OR SHAPE EARTH DIKE TO LINE, GRADE, AND CROSS SECTION AS SPECIFIED. BANK PROJECTIONS OR OTHER IRREGULARITIES ARE NOT ALLOWED.
3. COMPACT FILL.
4. CONSTRUCT FLOW CHANNEL ON AN UNINTERRUPTED, CONTINUOUS GRADE, ADJUSTING THE LOCATION DUE TO FIELD CONDITIONS AS NECESSARY TO MAINTAIN POSITIVE DRAINAGE.
5. PROVIDE OUTLET PROTECTION AS REQUIRED ON APPROVED PLAN.
6. STABILIZE EARTH DIKE WITHIN THREE DAYS OF INSTALLATION. STABILIZE FLOW CHANNEL FOR CLEAR WATER DIVERSION WITHIN 24 HOURS OF INSTALLATION.
7. MAINTAIN LINE, GRADE, AND CROSS SECTION. REMOVE ACCUMULATED SEDIMENT AND DEBRIS, AND MAINTAIN POSITIVE DRAINAGE. KEEP EARTH DIKE AND POINT OF DISCHARGE FREE OF EROSION, AND CONTINUOUSLY MEET REQUIREMENTS FOR ADEQUATE VEGETATIVE ESTABLISHMENT IN ACCORDANCE WITH SECTION B–4 VEGETATIVE STABILIZATION.
8. UPON REMOVAL OF EARTH DIKE, GRADE AREA FLUSH WITH EXISTING GROUND. WITHIN 24 HOURS OF REMOVAL STABILIZE DISTURBED AREA WITH TOPSOIL, SEED, AND MULCH, OR AS SPECIFIED ON APPROVED PLAN.

C-2 STANDARDS AND SPECIFICATIONS

FOR

TEMPORARY SWALE

Definition

A temporary, excavated flow channel constructed and located to convey runoff to a desired location.

Purpose

To direct sediment-laden runoff to a sediment trapping practice or to intercept and divert clear water away from disturbed areas.

Conditions Where Practice Applies

Appropriate uses of temporary swales include the following:

1. To divert sediment-laden runoff from a disturbed area to a sediment trapping practice.
2. To segment drainage areas to reduce acreage to sediment control practices.
3. To divert clear water from an undisturbed area to a stabilized outlet at a non-erosive velocity.

There are two standard sizes of temporary swales and three types of flow channel stabilization.

Design Criteria

Table C.3: Temporary Swale Design Criteria

	Swale A	**Swale B**
Drainage Area	(See Table C.4)	(See Table C.5)
Slope of swale	(See Table C.4)	(See Table C.5)
Bottom Width of Flow Channel	4 foot minimum	6 foot minimum
Depth of Flow Channel	1 foot minimum	1 foot minimum
Side Slopes	2:1 or flatter	2:1 or flatter

Flow Channel Stabilization

1	Seed with straw mulch and tack.
2	Seed with soil stabilization matting or sod.
3	Four (4) to seven (7) inch stone or equivalent recycled concrete pressed flush a minimum of seven (7) inches into ground.

Design Criteria (continued)

1. Determine the longitudinal slopes of temporary swale. Determine the drainage area to various design points along the proposed temporary swale alignments.

2. Design points are located where changes in slopes and/or increases in drainage area may alter the type and stabilization of the temporary swale.

3. Use Table C.4 or C.5 to select the appropriate temporary swale type (A or B) and flow channel stabilization (1, 2, or 3) for the temporary swale alignment between the design points. **Flow channel stabilization 1 (seed and mulch) is not allowed for diverting clear water.**

4. Review the slopes along the temporary swale alignment between the design points to ensure that the slope/drainage area relationship does not exceed the selected flow channel stabilization.

5. Maintain positive drainage along the entire length of the temporary swale. Spot elevations must be provided for temporary swales having longitudinal slopes flatter than 1%.

6. For drainage areas other than specified in Table C.4 or C.5, an engineering design is required.

7. Show temporary swale type (A or B) and flow channel stabilization (1, 2, or 3) on the plans using the standard symbol and A-1 or B-3, etc. Temporary swale type and flow channel stabilization may vary along its length.

8. Discharge velocities from a temporary swale must be non-erosive.

9. Where a temporary swale is used to convey runoff from disturbed areas, the discharge must be to a sediment control practice suitable for concentrated flow. Silt fence and super silt fence are unacceptable for receiving discharges from temporary swale.

10. Where a temporary swale is used to convey clear water runoff, the discharge must be to an undisturbed, stable area at a non-erosive velocity (4 fps); otherwise, provide outlet protection.

11. When a temporary swale is used in conjunction with a sediment trapping device, sequence construction so that the temporary swale installation follows completion of the sediment trapping device(s).

Table C.4: Temporary Swale Selection

Swale A: Drainage Area ≤ 5 acres

4 Foot Flat Bottom

Slope %**	**Drainage Area (acres)**				
	1	**2**	**3**	**4**	**5**
1	SEED	AND			
2	MULCH		4	4	4
3	**A-1**	4		SEED	AND
4		SOIL	STABILI	ZATION	MATTING
5	4*				
6			**A-2**		
7					6
8				6	**A-3**
9				4 TO 7	INCH
10			6	STONE	

*Velocity of flow in feet/second
** For swale slopes steeper than 10 percent refer to Section D - Erosion Control

Notes:
If the slope of the swale or drainage area to the swale falls between values on Table C.4, round to the next higher slope or drainage area.

A-1 swales are <u>not</u> allowed for diverting clear water.

<u>Stabilization</u>

A-1: Seed with mulch and tack

A-2: Seed and soil stabilization matting or sod

A-3: 4 to 7 inch stone pressed flush into ground a minimum of 7 inches

Table C.5: Temporary Swale Selection

Swale B: 5 acres < Drainage Area ≤ 10 acres.

6 Foot Flat Bottom

Slope %**	**Drainage Area (acres)**				
	6	**7**	**8**	**9**	**10**
1	4*		**B-2**		
2	SEED	AND			
3	SOIL	STABILI	ZATION	6	6
4	MATT	ING	6		
5		6			
6	6			**B-3**	
7			4 TO 7	INCH	STONE
8					
9					
10					

*Velocity of flow in feet/second
** For swale slopes steeper than 10 percent refer to Section D - Erosion Control

Notes:
If the slope of the swale or drainage area to the swale falls between values on Table C.5, round to the next higher slope or drainage area.

Stabilization

B-2: Seed and soil stabilization matting or sod

B-3: 4 to 7 inch stone pressed flush into ground a minimum of 7 inches

Engineering Design Criteria

An engineering design may preempt the use of Table C.4 or C.5. Use the 2-year frequency storm with NRCS methodologies (i.e., TR-55, TR-20), assuming the worst soil cover conditions to prevail in the contributing drainage area over the life of the temporary swale. Use the Manning's Equation to determine temporary swale flow channel velocities associated with the developed discharges. The Manning's roughness coefficients to be used in the equation are 0.025 for seed and mulch and 0.03 for soil stabilization matting or sod. For 4 to 7 inch stone use 0.045 for flow depths up to 1 foot and 0.038 for flow depths between 1 and 2 feet. The allowable flow channel velocities are < 4 fps for seed and mulch, < 6 fps for stabilization matting or sod, and < 8 fps for 4 to 7 inch stone. For site conditions exceeding those where Temporary Swale criteria apply, refer to Section H-3 Lined Channel.

Maintenance

The line, grade, and cross section must be maintained. Accumulated sediment and debris must be removed and positive drainage maintained. The temporary swale and point of discharge must be kept free of erosion and continuously meet the requirements for Adequate Vegetative Establishment in accordance with Section B-4 Vegetative Stabilization.

DETAIL C-2 TEMPORARY SWALE

STANDARD SYMBOL

A–1

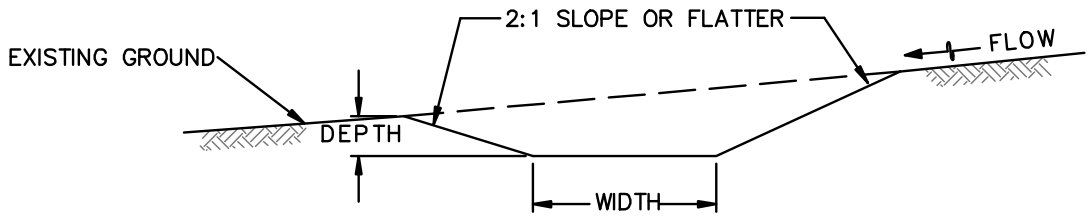

CROSS SECTION

	SWALE TYPE A	SWALE TYPE B
MIN. DEPTH	1 FT MIN.	1 FT MIN.
BOTTOM WIDTH	4 FT MIN.	6 FT MIN.

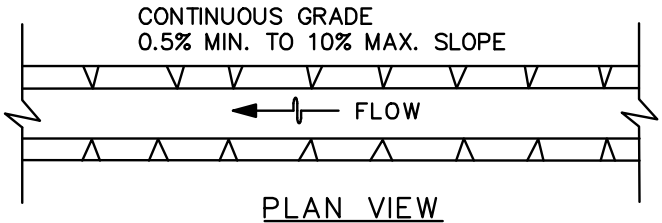

PLAN VIEW

FLOW CHANNEL STABILIZATION

A–1 SEED WITH STRAW MULCH AND TACK. (NOT ALLOWED FOR CLEAR WATER DIVERSION.)

A–2/B–2 SEED WITH SOIL STABILIZATION MATTING OR LINE WITH SOD.

A–3/B–3 4 TO 7 INCH STONE OR EQUIVALENT RECYCLED CONCRETE PRESSED INTO SOIL A MINIMUM OF 7 INCHES AND FLUSH WITH GROUND.

CONSTRUCTION SPECIFICATIONS

1. REMOVE AND DISPOSE OF ALL TREES, BRUSH, STUMPS, OBSTRUCTIONS, AND OTHER OBJECTIONABLE MATERIAL SO AS NOT TO INTERFERE WITH PROPER FUNCTION OF TEMPORARY SWALE.
2. EXCAVATE OR SHAPE TEMPORARY SWALE TO LINE, GRADE, AND CROSS SECTION AS SPECIFIED. BANK PROJECTIONS OR OTHER IRREGULARITIES ARE NOT ALLOWED.
3. STABILIZE TEMPORARY SWALE WITHIN THREE DAYS OF INSTALLATION. STABILIZE SWALES USED FOR CLEAR WATER DIVERSION WITHIN 24 HOURS OF INSTALLATION.
4. CONSTRUCT FLOW CHANNEL ON AN UNINTERRUPTED, CONTINUOUS GRADE, ADJUSTING THE LOCATION DUE TO FIELD CONDITIONS AS NECESSARY TO MAINTAIN POSITIVE DRAINAGE.
5. PROVIDE OUTLET PROTECTION AS REQUIRED ON APPROVED PLAN.
6. MAINTAIN LINE, GRADE, AND CROSS SECTION. REMOVE ACCUMULATED SEDIMENT AND DEBRIS, AND MAINTAIN POSITIVE DRAINAGE. KEEP TEMPORARY SWALE AND POINT OF DISCHARGE FREE OF EROSION, AND CONTINUOUSLY MEET REQUIREMENTS FOR ADEQUATE VEGETATIVE ESTABLISHMENT IN ACCORDANCE WITH SECTION B–4 VEGETATIVE STABILIZATION.
7. UPON REMOVAL OF TEMPORARY SWALE, GRADE AREA FLUSH WITH EXISTING GROUND. WITHIN 24 HOURS OF REMOVAL STABILIZE DISTURBED AREA WITH TOPSOIL, SEED, AND MULCH, OR AS SPECIFIED ON APPROVED PLAN.

C-3 STANDARDS AND SPECIFICATIONS

FOR

PERIMETER DIKE/SWALE

Definition

A temporary berm of soil created from excavated material used to form an adjoining channel located along the perimeter of the site or disturbed area.

Purpose

To prevent clear water runoff from entering disturbed areas by intercepting and diverting it to a stabilized outlet or to intercept sediment-laden water and divert it to a sediment trapping practice.

Conditions Where Practice Applies

Appropriate uses of perimeter dike/swale include the following:

1. To divert sediment-laden runoff from a disturbed area to a sediment trapping practice.

2. To segment drainage areas to reduce acreage to sediment control practices.

3. To divert clear water from an undisturbed area to a stabilized outlet at non-erosive velocity.

There are two types of flow channel stabilization used with perimeter dike/swales.

Design Criteria

PDS Type	**Drainage Area**	**Stabilization**
PDS - 1	1 acre or less	Seed and Mulch
PDS - 2	1 to 2 acres	Seed and cover with soil stabilization matting or line with sod

Note: PDS -1 is not allowed for clear water diversions.

1. Maximum drainage area for this practice is 2 acres (for drainage areas larger than 2 acres see Detail C-1 Earth Dike or Detail C-2 Temporary Swale).

2. Minimum height from bottom of swale to top of dike; 12 inches evenly divided between dike height and swale depth. Top width of dike: 1 foot minimum. Bottom width of swale: 1 foot minimum.

3. The slope of the perimeter dike/swale will be dependent upon the topography and must not exceed 10 percent.

4. Determine the longitudinal slopes of perimeter dike/swale. Determine the drainage area to various design points along the proposed temporary swale alignments.

5. Design points are located where changes in slopes and/or increases in drainage area may alter the type and stabilization of the perimeter dike/swale.

6. Use table to select the appropriate perimeter dike/swale type (1 or 2) for the alignment between the design points. **Flow channel stabilization using seed and mulch (PDS-1) is not allowed for diverting clear water.**

7. Maintain positive drainage along the entire length of the perimeter dike/swale. Spot elevations must be provided for perimeter dike/swales having longitudinal slopes flatter than 1%.

8. Show perimeter dike/swale type on the plan using the standard symbol (PDS-1 or PDS-2).

9. Discharge velocities from a perimeter dike/swale must be non-erosive.

10. Where a perimeter dike/swale is used to convey runoff from disturbed areas, the discharge must be to a sediment control practice suitable for concentrated flow. Silt fence and super silt fence are unacceptable for receiving discharges from a perimeter dike/swale.

11. Where a perimeter dike/swale (PDS-2) is used to convey clear water runoff, the discharge must be to an undisturbed, stable area at a non-erosive velocity (4 fps); otherwise, provide outlet protection.

12. When a perimeter dike/swale is used in conjunction with a sediment trapping device, sequence construction so that the perimeter dike/swale installation follows completion of the sediment trapping device(s).

Maintenance

The line, grade, and cross section must be maintained. Accumulated sediment and debris must be removed and positive drainage maintained. The perimeter dike/swale and point of discharge must be kept free of erosion and continuously meet the requirements for Adequate Vegetative Establishment in accordance with Section B-4 Vegetative Stabilization.

DETAIL C-3 PERIMETER DIKE/SWALE

STANDARD SYMBOL
PDS–1

PLACE DESIGNATION (PDS–1 OR 2) ON FLOW CHANNEL SIDE OF DIKE–SWALE.

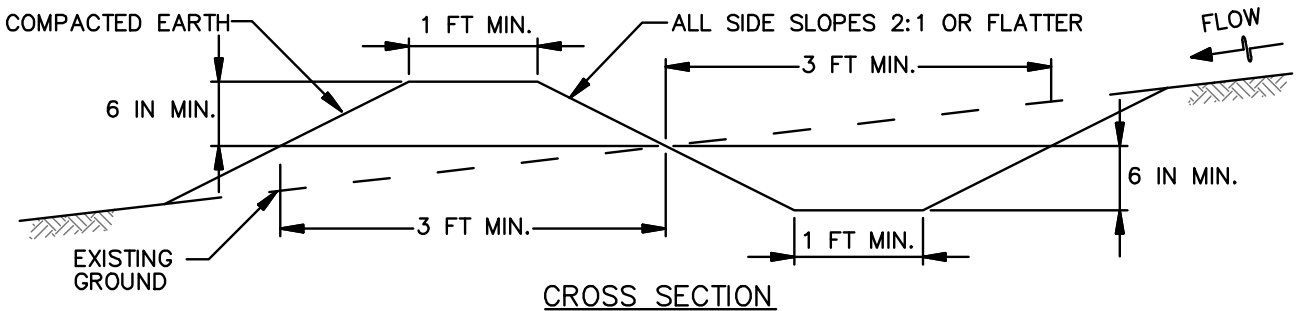

CROSS SECTION

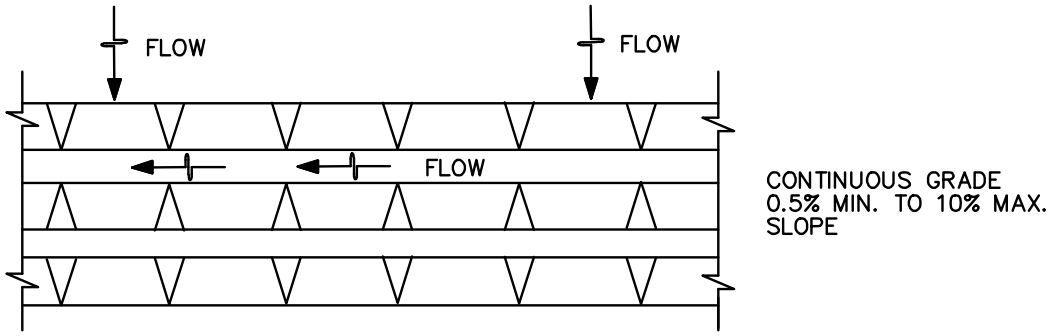

PLAN VIEW

FLOW CHANNEL STABILIZATION

PDS–1 SEED AND MULCH AND TACK (DRAINING < 1 ACRE)
(NOT ALLOWED FOR CLEAR WATER DIVERSION.)

PDS–2 SEED WITH SOIL STABILIZATION MATTING OR LINE WITH SOD
(DRAINING BETWEEN 1 AND 2 ACRES)

NOTE: THE MAXIMUM DRAINAGE AREA FOR THIS PRACTICE IS 2 ACRES.

CONSTRUCTION SPECIFICATIONS

1. REMOVE AND DISPOSE OF ALL TREES, BRUSH, STUMPS, OBSTRUCTIONS, AND OTHER OBJECTIONABLE MATERIAL SO AS NOT TO INTERFERE WITH PROPER FUNCTION OF DIKE/SWALE.
2. EXCAVATE OR SHAPE DIKE/SWALE TO LINE, GRADE, AND CROSS SECTION AS SPECIFIED. BANK PROJECTIONS OR OTHER IRREGULARITIES ARE NOT ALLOWED.
3. COMPACT FILL.
4. CONSTRUCT DIKE/SWALE ON AN UNINTERRUPTED, CONTINUOUS GRADE, ADJUSTING THE LOCATION DUE TO FIELD CONDITIONS AS NECESSARY TO MAINTAIN POSITIVE DRAINAGE.
5. PROVIDE OUTLET PROTECTION AS REQUIRED ON APPROVED PLAN.
6. STABILIZE DIKE/SWALE WITHIN 3 DAYS OF INSTALLATION. STABILIZE DIKE/SWALES USED FOR CLEAR WATER DIVERSION WITHIN 24 HOURS OF INSTALLATION.
7. MAINTAIN LINE, GRADE, AND CROSS SECTION. REMOVE ACCUMULATED SEDIMENT AND DEBRIS, AND MAINTAIN POSITIVE DRAINAGE. KEEP PERIMETER DIKE/SWALE AND POINT OF DISCHARGE FREE OF EROSION AND CONTINUOUSLY MEET REQUIREMENTS FOR ADEQUATE VEGETATIVE ESTABLISHMENT IN ACCORDANCE WITH SECTION B–4 VEGETATIVE STABILIZATION.
8. UPON REMOVAL OF DIKE/SWALE, GRADE AREA FLUSH WITH EXISTING GROUND. WITHIN 24 HOURS OF REMOVAL STABILIZE DISTURBED AREA WITH TOPSOIL, SEED, MULCH, OR AS SPECIFIED ON APPROVED PLAN.

C-4 STANDARDS AND SPECIFICATIONS

FOR

TEMPORARY STORM DRAIN DIVERSION

Definition

A temporary swale or pipe that redirects a storm drain system or outfall channel into a sediment trap or basin.

Purpose

To prevent sediment-laden water conveyed by the storm drain system from reaching a watercourse or off-site property.

Conditions Where Practice Applies

Where the discharge of a storm drain system can be effectively conveyed to a sediment trapping device.

One of the following practices or procedures must be used to temporarily divert the storm drain system:

1. Construction of a sediment trap or basin below a permanent storm drain outfall: the storm drain system outfalls into a temporary basin or trap constructed below the permanent outfall channel.

2. In-line diversion of storm drain at an inlet or manhole: this diversion requires installing a pipe stub in the side of a manhole or inlet and temporarily blocking the permanent outfall pipe from that structure. A temporary swale or pipe may be used to convey storm flow from the stub to a sediment trap or basin. Size the diversion swale or pipe based on the storm drain system design criteria (i.e., 10 year storm). This method may be used just above a permanent outfall or prior to connecting into an existing storm drain system.

3. Delay completion of the permanent storm drain outfall and temporarily divert storm flow into a sediment basin or trap: an earth dike, swale, or designed diversion can be used, depending on the drainage area, to direct flow into a sediment basin or trap.

4. Installation of a stormwater management basin early in the construction sequence: install temporary measures to allow use as a sediment basin. Because these structures are designed to receive storm drain outfalls, diversion should not be necessary.

Provide the following statement on the plans: Inlet protection is not required and should not be provided if storm drain diversions have been installed and are functioning properly.

Removal and Restoration

When the areas contributing sediment to the storm drain system have been stabilized, restore the system to its planned use. The following removal and restoration procedure must be included in the sequence of operations for the erosion and sediment control plan:

1. Flush the storm drain system prior to removal or conversion of the trap or basin to remove any accumulated sediment.

2. Establish a permanent stabilized outfall channel as noted on the plan.

3. For sites where an inlet was modified, plug the temporary pipe stub and open the permanent outfall pipe.

4. Restore the area to grades shown on the plan and stabilize with vegetative measures.

Maintenance

Water tight connections must be maintained. Accumulated sediment and debris must be removed. Positive drainage must be maintained.

C-5 STANDARDS AND SPECIFICATIONS

FOR

TEMPORARY ASPHALT BERM

Definition

Temporary, macadam mound used to intercept flow and direct it across pavement.

Purpose

To direct sediment-laden runoff to a sediment control practice or to intercept and divert clear water runoff away from disturbed areas.

Conditions Where Practice Applies

Across paved areas where other diversion practices are not appropriate. Asphalt berms can also be used to direct runoff into an inlet or in conjunction with inlet protection. The asphalt berm must remain in place until the disturbed contributory drainage areas are stabilized.

Appropriate uses of temporary asphalt berms include:

1. To divert sediment-laden runoff from a disturbed area to a sediment control practice.
2. To segment drainage areas.
3. To direct clear water from an undisturbed area at non-erosive rates to a stabilized outlet.

Design Criteria

1. The maximum drainage area to an asphalt berm is 1½ acre.
2. The maximum slope of contributory area is 10 percent.
3. The maximum slope along the berm is 10 percent.
4. Where an asphalt berm is used to convey the runoff diverted from disturbed areas, the discharge must be to a sediment control practice suitable for concentrated flow.
5. When used on an entrance in conjunction with silt fence on pavement, place asphalt berm in a “V” configuration with the apex pointing upgrade.
6. Where an asphalt berm is used to convey clear water runoff, the discharge must be to an undisturbed, stable area at a non-erosive velocity; otherwise, provide outlet protection.

Maintenance

Damaged asphalt must be repaired. Accumulated sediment and debris must be removed and positive drainage maintained.

DETAIL C-5 TEMPORARY ASPHALT BERM

STANDARD SYMBOL

TAB

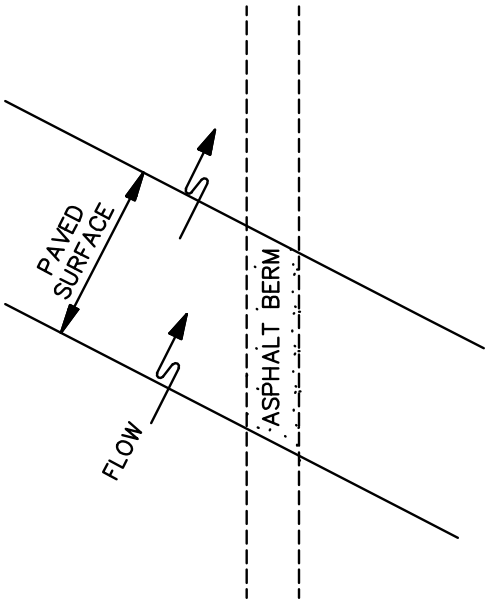

PLAN VIEW

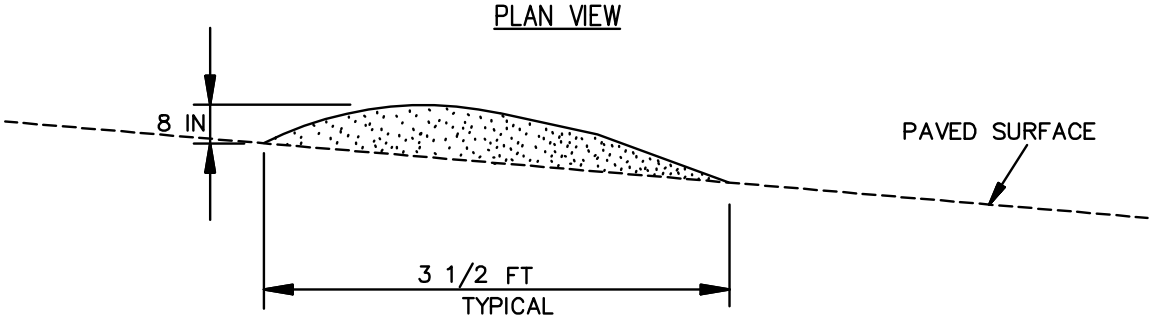

CROSS SECTION

CONSTRUCTION SPECIFICATIONS

1. CONSTRUCT BERM ON AN UNINTERRUPTED, CONTINUOUS GRADE.
2. INSTALL BERM TO CONFORM TO CROSS SECTION DIMENSIONS OF A UNIFORM HEIGHT OF 8 INCHES MINIMUM AND APPROXIMATE WIDTH OF 3½ FEET.
3. PROVIDE OUTLET PROTECTION AS REQUIRED ON PLAN.
4. COMPACT ASPHALT BERM.
5. REPAIR DAMAGED ASPHALT. REMOVE ACCUMULATED SEDIMENT AND DEBRIS. MAINTAIN POSITIVE DRAINAGE.
6. UPON REMOVAL OF ASPHALT BERM, RETURN TO ORIGINAL CONDITIONS OR AS SPECIFIED ON APPROVED PLAN.

C-6 STANDARDS AND SPECIFICATIONS

FOR

CLEAR WATER DIVERSION PIPE

Definition

A temporary pipe installed in conjunction with sandbag dikes. Use of flexible pipe is preferred.

Purpose

To convey channel or pipe flow around a work area.

Conditions Where Practice Applies

This practice is used when the proposed work is located in a drainage way.

Design Criteria

Table C.6: Clear Water Diversion Pipe Design Criteria

Maximum Drainage Area (acres)	Pipe Diameter (inches)
0.5	12
1.5	18
2.5	21
3.5	24
5.0	twin 24

1. The height of the sandbag dike must be a minimum of twice the diameter of the diversion pipe.

2. The diversion pipe must outlet onto a stable area at a non-erosive velocity. Provide outlet protection, if necessary, in accordance with Section D - Erosion Control.

3. If the drainage area to the pipe diversion exceeds 5 acres, an engineering design must be used and based on the two-year storm event.

Note: A waterway construction permit is required when this practice is used to convey base flow for areas designated as waters of the State.

Maintenance

The point of discharge must be kept free of erosion. Water tight connections and positive drainage must be maintained. Sandbags and impermeable sheeting must be replaced if torn.

DETAIL C-6 CLEAR WATER DIVERSION PIPE

STANDARD SYMBOL

CWD – 12

DESIGNATION CWD–12 REFERS TO 12 INCH CLEAR WATER DIVERSION.

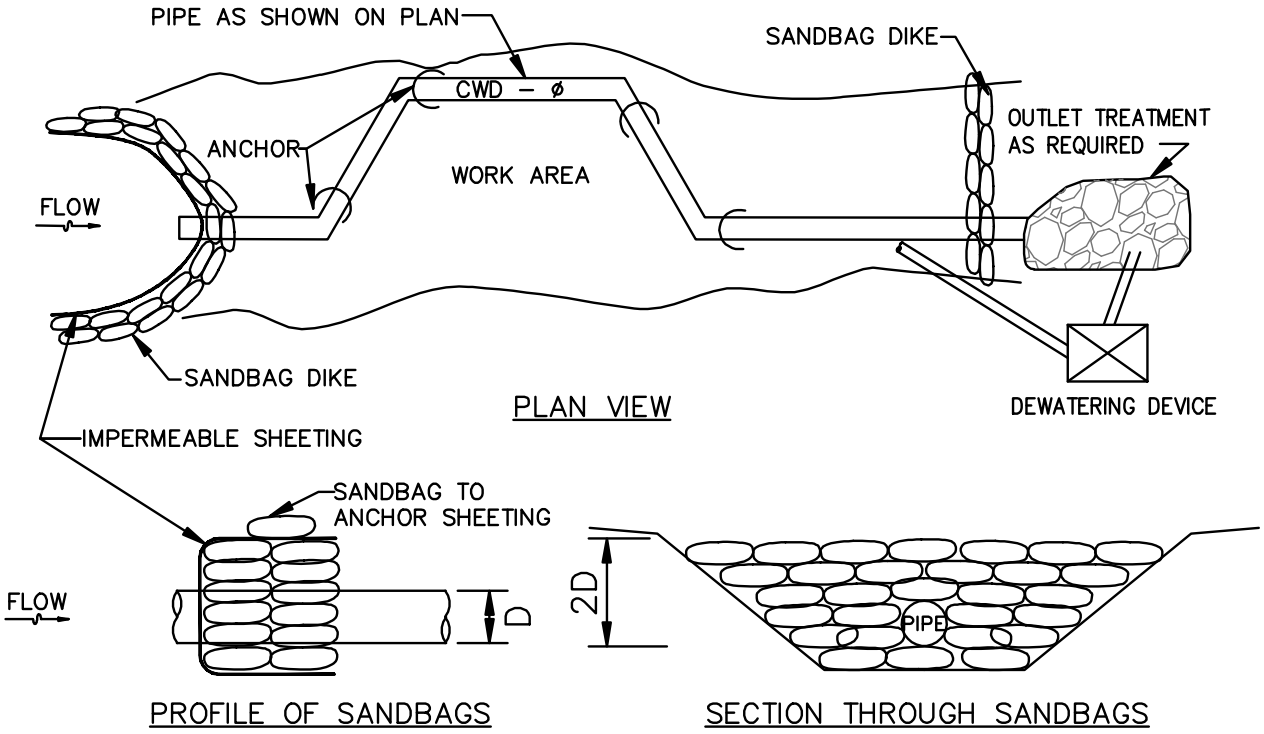

CONSTRUCTION SPECIFICATIONS

1. FLEXIBLE PIPE IS PREFERRED. HOWEVER, CORRUGATED METAL PIPE OR EQUIVALENT PVC PIPE CAN BE USED. MAKE ALL JOINTS WATERTIGHT.
2. FOR SANDBAGS USE MATERIALS THAT ARE RESISTANT TO ULTRA–VIOLENT RADIATION, TEARING, AND PUNCTURE AND WOVEN TIGHTLY ENOUGH TO PREVENT LEAKAGE OF FILL MATERIAL.
3. USE 10 MIL OR THICKER, UV RESISTANT, IMPERMEABLE SHEETING OR OTHER APPROVED MATERIAL THAT IS IMPERMEABLE AND RESISTANT TO PUNTURING AND TEARING.
4. PLACE IMPERMEABLE SHEETING SUCH THAT UPGRADE PORTION OVERLAPS DOWNGRADE PORTION BY A MINIMUM OF 18 INCHES.
5. SET HEIGHT OF SANDBAG DIKE AT TWICE THE PIPE DIAMETER. MAINTAIN HEIGHT ALONG LENGTH OF SANDBAG DIKE. PLACE DOUBLE ROW OF SANDBAGS.
6. AT A MINIMUM, SECURELY ANCHOR DIVERSION PIPE AT EACH DOWNGRADE JOINT.
7. SET OUTLET END OF DIVERSION PIPE LOWER THAN INLET END.
8. PROVIDE OUTLET PROTECTION AS REQUIRED ON APPROVED PLAN.
9. DEWATER WORK AREA USING AN APPROVED EROSION AND SEDIMENT CONTROL PRACTICE AS SPECIFIED ON APPROVED PLAN.
10. KEEP POINT OF DISCHARGE FREE OF EROSION. MAINTAIN WATER TIGHT CONNECTIONS AND POSITIVE DRAINAGE. REPLACE SANDBAGS AND IMPERMEABLE SHEETING IF TORN.

C-7 STANDARDS AND SPECIFICATIONS

FOR

TEMPORARY BARRIER DIVERSION

Definition

A temporary, structural conveyance consisting of traffic control barriers, sandbags, and a liner.

Purpose

To direct clear water channel flow around a work area.

Conditions Where Practice Applies

This practice is used when the proposed work is located in a drainage way.

Design Criteria

1. Top elevation of the barrier must be H/2 + 1 foot minimum when the project duration is less than two weeks. Otherwise, use the two-year frequency storm elevation plus 1 foot freeboard. (H is the height of channel bank.) The top elevation must be clearly indicated on the plans.

2. The width of the diversion channel must be at least 45 percent of the channel being diverted.

Note: A waterway construction permit is required when this practice is used in areas designated as waters of the State.

Maintenance

The abutments between concrete barriers must be kept water tight. Sandbags and impermeable sheeting must be replaced if torn.

DETAIL C-7 TEMPORARY BARRIER DIVERSION

STANDARD SYMBOL

TBD

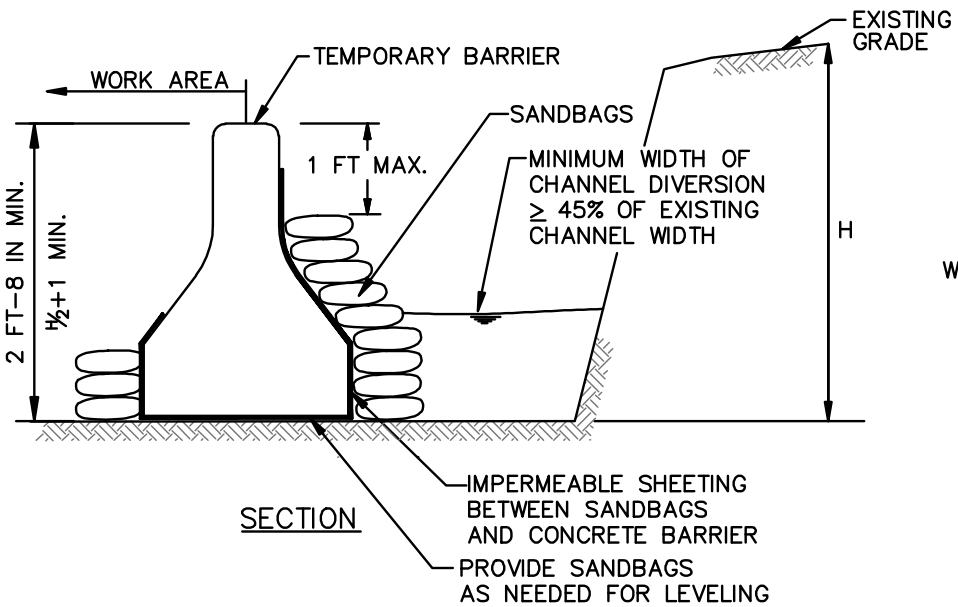

SECTION

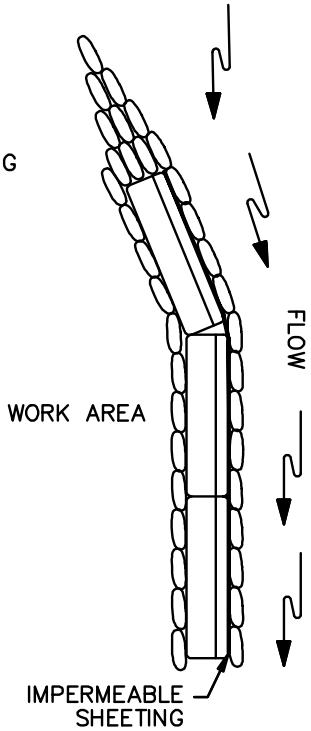

PLAN

CONSTRUCTION SPECIFICATIONS

1. FOR SANDBAGS USE MATERIALS THAT ARE RESISTANT TO ULTRA–VIOLET RADIATION, TEARING, AND PUNCTURE AND WOVEN TIGHTLY ENOUGH TO PREVENT LEAKAGE OF FILL MATERIAL.
2. USE BARRIER MADE OF CONCRETE OR OTHER APPROVED MATERIAL.
3. USE 10 MIL OR THICKER, UV RESISTANT, IMPERMEABLE SHEETING OR OTHER APPROVED MATERIAL THAT IS IMPERMEABLE AND RESISTANT TO PUNCTURING AND TEARING.
4. ESTABLISH TOP ELEVATION AT H/2 + 1 FOOT FOR PROJECTS OF DURATION LESS THAN 2 WEEKS OR AS SPECIFIED ON APPROVED PLAN.
5. INSTALL DIVERSION STRUCTURE FROM UPGRADE TO DOWNGRADE.
6. PLACE IMPERMEABLE SHEETING SUCH THAT UPGRADE PORTION OVERLAPS DOWNGRADE PORTION BY A MINIMUM OF 18 INCHES.
7. USE SANDBAG BASE FOR LEVELING AND TO ESTABLISH MINIMUM TOP ELEVATION OF THE BARRIER AS REQUIRED.
8. DISPOSE OF ALL EXCAVATED MATERIALS IN AN APPROVED DISPOSAL AREA OUTSIDE OF THE 100–YEAR FLOODPLAIN.
9. DEWATER WORK AREA USING AN APPROVED EROSION AND SEDIMENT CONTROL PRACTICE AS SPECIFIED ON APPROVED PLAN.
10. KEEP ABUTMENTS BETWEEN CONCRETE BARRIERS WATER TIGHT. REPLACE SANDBAGS AND IMPERMEABLE SHEETING IF TORN.

C-8 STANDARDS AND SPECIFICATIONS

FOR

MOUNTABLE BERM

Definition

An earth mound covered with geotextile and capped with stone.

Purpose

To allow construction vehicles to traverse an earth dike or other sediment control practices.

Conditions Where Practice Applies

Interior areas of a site where water conveyance practices need to be crossed by vehicles.

Design Criteria

If a mountable berm is used to cross an earth dike that is conveying clear water, the flow must be piped under the crossing.

Maintenance

The line, grade, and cross section must be maintained. This may require adding stone or making other repairs as conditions demand to maintain the specified dimensions. Accumulated sediment and debris must be removed and positive drainage maintained.

DETAIL C-8 MOUNTABLE BERM

STANDARD SYMBOL

MB

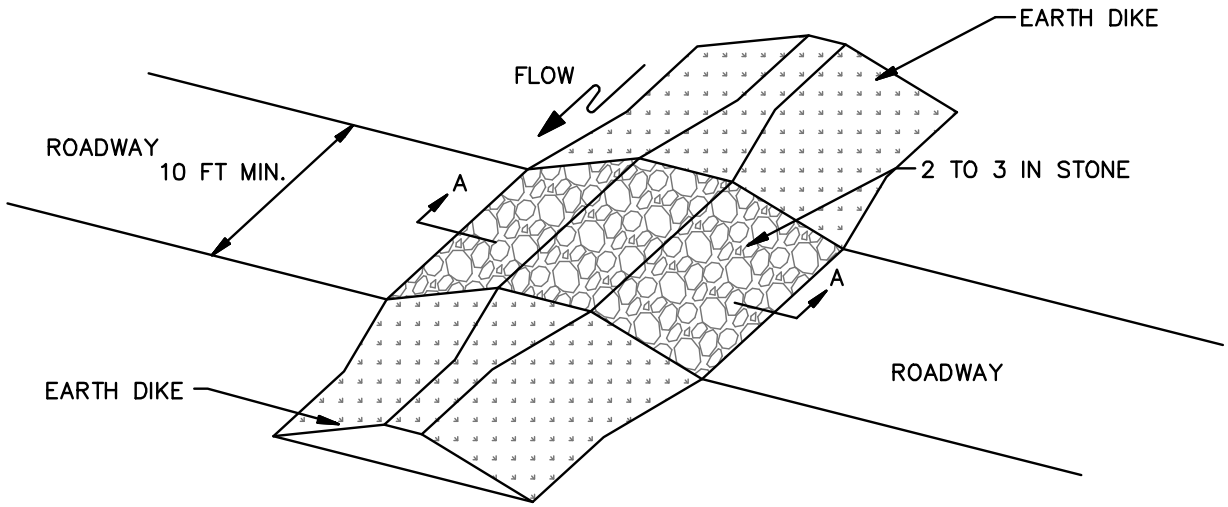

ISOMETRIC VIEW

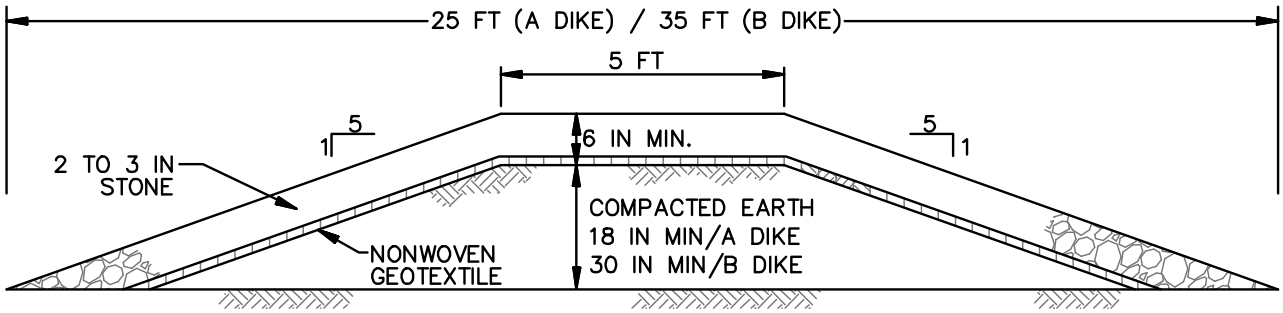

SECTION A–A

CONSTRUCTION SPECIFICATIONS

1. USE MINIMUM WIDTH OF 10 FEET TO ALLOW FOR VEHICULAR PASSAGE.
2. PLACE NONWOVEN GEOTEXTILE, AS SPECIFIED IN SECTION H–1 MATERIALS, OVER THE EARTH MOUND PRIOR TO PLACING STONE.
3. PLACE 2 TO 3 INCH STONE OR EQUIVALENT RECYCLED CONCRETE AT LEAST 6 INCHES DEEP OVER THE LENGTH AND WIDTH OF THE MOUNTABLE BERM.
4. MAINTAIN LINE, GRADE, AND CROSS SECTION. ADD STONE OR MAKE OTHER REPAIRS AS CONDITIONS DEMAND TO MAINTAIN SPECIFIED DIMENSIONS. REMOVE ACCUMULATED SEDIMENT AND DEBRIS. MAINTAIN POSITIVE DRAINAGE.

C-9 STANDARDS AND SPECIFICATIONS

FOR

DIVERSION FENCE

Definition

A temporary barrier of impermeable sheeting over chain link fence located in such a manner as to direct water to a desired location.

Purpose

To direct sediment-laden runoff to a sediment trapping practice, or to intercept and divert clear water away from disturbed areas.

Conditions Where Practice Applies

Constructed along the limit of disturbance (LOD) or across disturbed areas, a diversion fence is used when there is insufficient space to construct an earth dike, temporary swale, or perimeter dike swale.

Appropriate uses of diversion fences include the following:

1. To divert sediment-laden runoff from a disturbed area to a sediment trapping practice.
2. To segment drainage areas for reducing acreage to sediment control practices.
3. To divert clear water from an undisturbed area to a stable outlet at non-erosive velocities.

Design Criteria

1. The maximum slope along fence is 10 percent.
2. The maximum drainage area is 2 acres.
3. For drainage areas larger than 2 acres, an engineering design may be used based on the 2-year frequency storm with NRCS methodologies (i.e., TR-55, TR-20), assuming the worst soil cover conditions to prevail in the contributing drainage area over the life of the diversion fence.
4. Maintain positive drainage along the entire length of the diversion fence. Spot elevations must be provided for diversion fence having longitudinal slopes flatter than 1%.
5. Discharge velocities from diversion fence must be non-erosive.
6. Where diversion fence is used to convey runoff from disturbed areas, the discharge must be to a sediment control practice suitable for concentrated flow. Silt fence and super silt fence are unacceptable for receiving discharges from diversion fence.
7. Where diversion fence is used to convey clear water runoff, the discharge must be to an undisturbed, stable area at a non-erosive velocity (4 fps); otherwise, provide outlet protection.
8. When diversion fence is used in conjunction with a sediment trapping device, sequence construction

so that the diversion fence installation follows completion of the sediment trapping device(s).

Maintenance

The flow surface along the diversion fence and at the point of discharge must be kept free of erosion. Accumulated sediment and debris must be removed and positive drainage maintained. Impermeable sheeting must be replaced if torn. If undermining occurs, reinstall fence.

DETAIL C-9 DIVERSION FENCE

STANDARD SYMBOL

DF

MAXIMUM DRAINAGE AREA = 2 ACRES

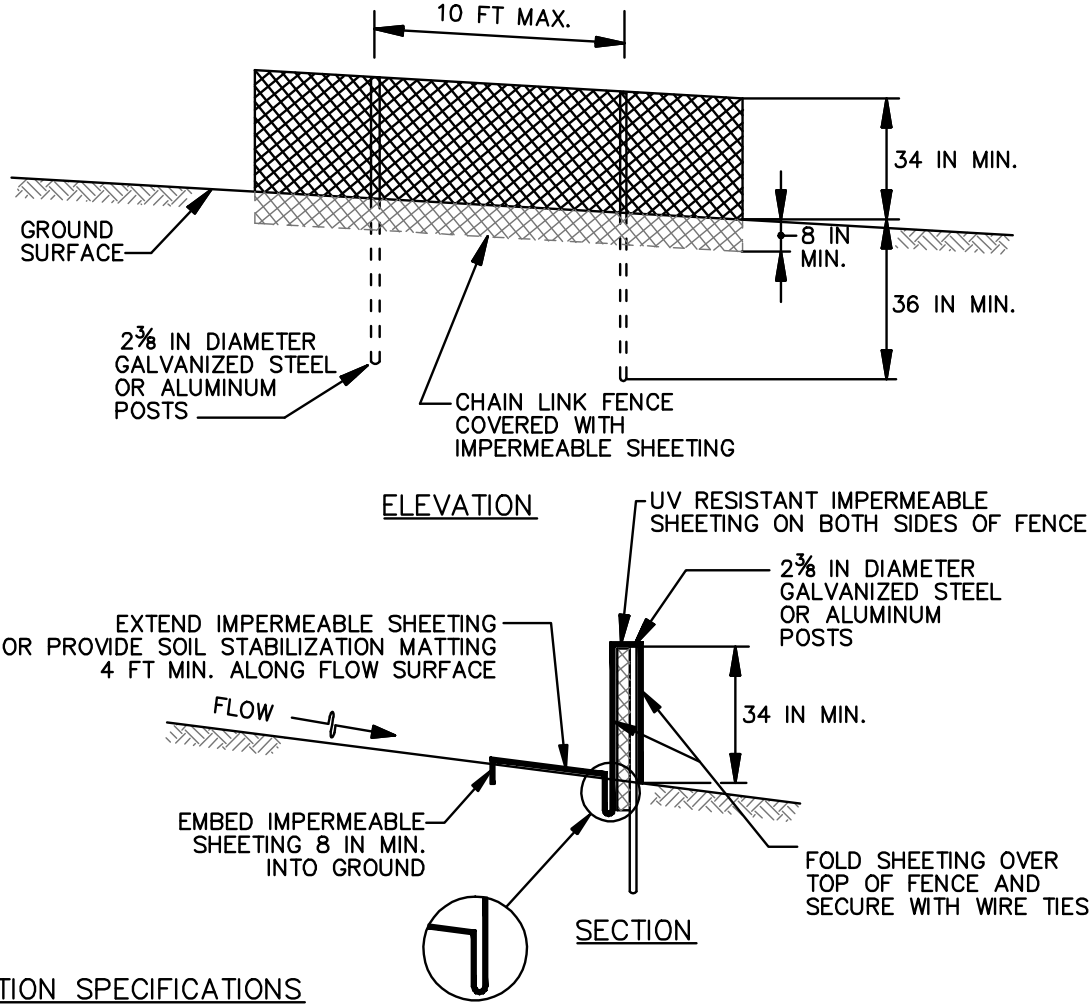

CONSTRUCTION SPECIFICATIONS

1. USE 42 INCH HIGH, 9 GAUGE OR THICKER CHAIN LINK FENCING (2⅜ INCH MAXIMUM OPENING).
2. USE 2⅜ INCH DIAMETER GALVANIZED STEEL POSTS OF 0.095 INCH WALL THICKNESS AND SIX FOOT LENGTH SPACED NO FURTHER THAN 10 FEET APART. THE POSTS DO NOT NEED TO BE SET IN CONCRETE.
3. FASTEN CHAIN LINK FENCE SECURELY TO THE FENCE POSTS WITH WIRE TIES.
4. SECURE 10 MIL OR THICKER UV RESISTANT, IMPERMEABLE SHEETING TO CHAIN LINK FENCE WITH TIES SPACED EVERY 24 INCHES AT TOP, MID SECTION, AND BELOW GROUND SURFACE.
5. EXTEND SHEETING A MINIMUM OF 4 FEET ALONG FLOW SURFACE AND EMBED END A MINIMUM OF 8 INCHES INTO GROUND. SOIL STABILIZATION MATTING MAY BE USED IN LIEU OF IMPERMEABLE SHEETING ALONG FLOW SURFACE.
6. WHEN TWO SECTIONS OF SHEETING ADJOIN EACH OTHER, OVERLAP BY 6 INCHES AND FOLD WITH SEAM FACING DOWNGRADE.
7. KEEP FLOW SURFACE ALONG DIVERSION FENCE AND POINT OF DISCHARGE FREE OF EROSION. REMOVE ACCUMULATED SEDIMENT AND DEBRIS. MAINTAIN POSITIVE DRAINAGE. REPLACE IMPERMEABLE SHEETING IF TORN. IF UNDERMINING OCCURS, REINSTALL FENCE.

SECTION D – EROSION CONTROL

D-1 STANDARDS AND SPECIFICATIONS

FOR

PIPE SLOPE DRAIN

Definition

A temporary conduit placed along a slope to convey flow to a desired location. Use of flexible piping is preferred.

Purpose

To safely convey concentrated flow down the face of a slope.

Conditions Where Practice Applies

On fill slopes in conjunction with earth dikes. The dikes direct surface runoff to the slope drain which conveys the concentrated flow down the face of the slope.

Design Criteria

1. The maximum drainage area is 7 acres.

2. The pipe slope drain must be at a 3 percent grade or steeper.

3. The location and discharge velocity determine the type of protection required (e.g., erosion control matting, rock outlet protection, inflow protection). At a minimum the last 4 feet of pipe must be at a slope flatter than 1%.

4. For flows from a disturbed area, the discharge must be directed to a sediment trapping practice.

5. At the inlet end of the pipe slope drain, the height of the earth dike must be 2 times the pipe diameter measured from the invert of the pipe. Extend the top elevation of the dike at zero percent grade until it intercepts the top of the adjoining perimeter dike(s).

Maintenance

The points of inflow and outflow must be kept free of erosion. Water tight connections and positive drainage must be maintained. Accumulated sediments and debris must be removed.

Table D.1: Pipe Slope Drain Design Criteria

Size	Diameter (inches)	Pipe Maximum Drainage Area (acres)
PSD-12	12	0.5
PSD-18	18	1.5
PSD-21	21	2.5
PSD-24	24	3.5
PSD-(2) (24)[1]	24	7.0

[1] Due to the height limitations on earth dikes, the maximum pipe diameter for pipe slope drain is 24 inches. For drainage areas over 3½ acres, two 24 inch pipes are to be used. A minimum spacing of 2D (4 feet) is required between pipes.

DETAIL D-1 PIPE SLOPE DRAIN

STANDARD SYMBOL

PSD – 12

DESIGNATION PSD–12 REFERS TO 12 IN PIPE SLOPE DRAIN.

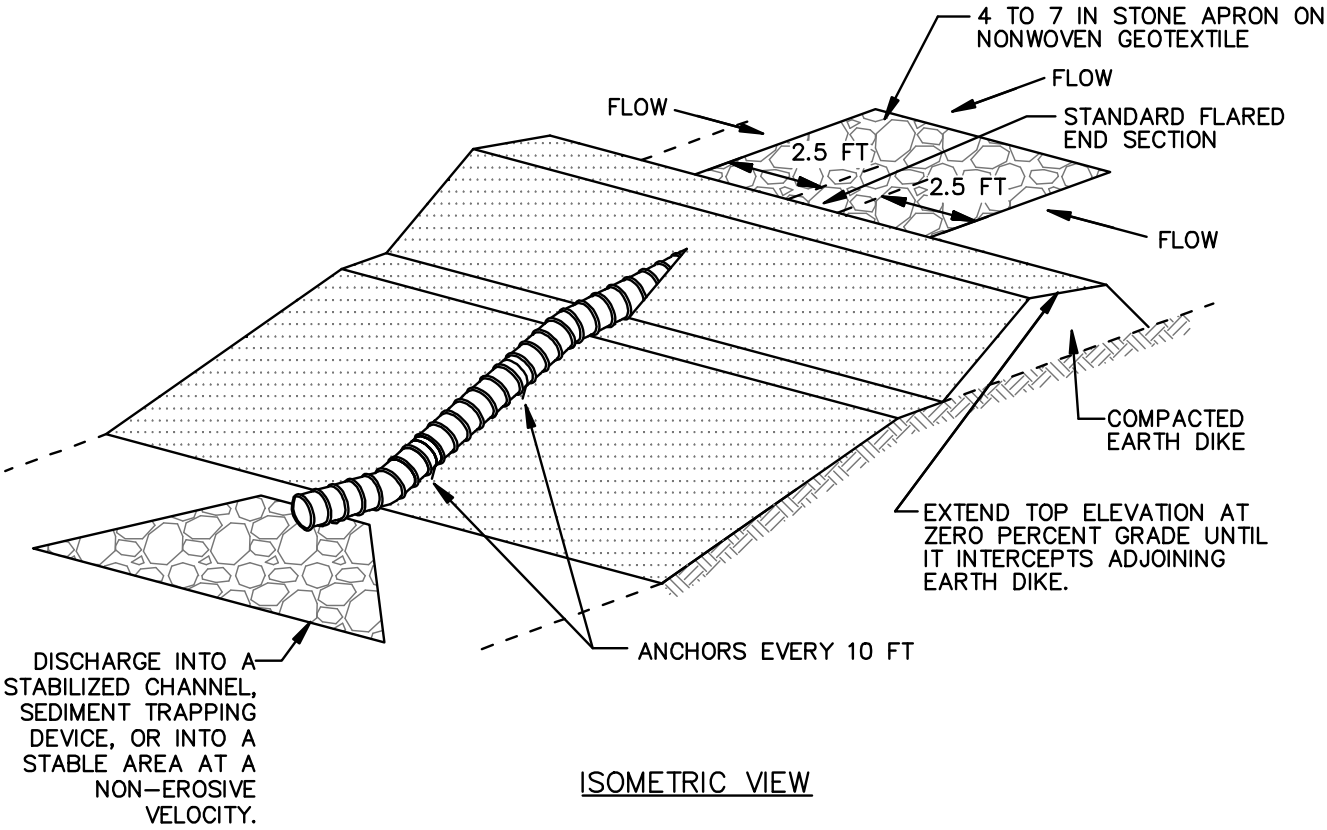

ISOMETRIC VIEW

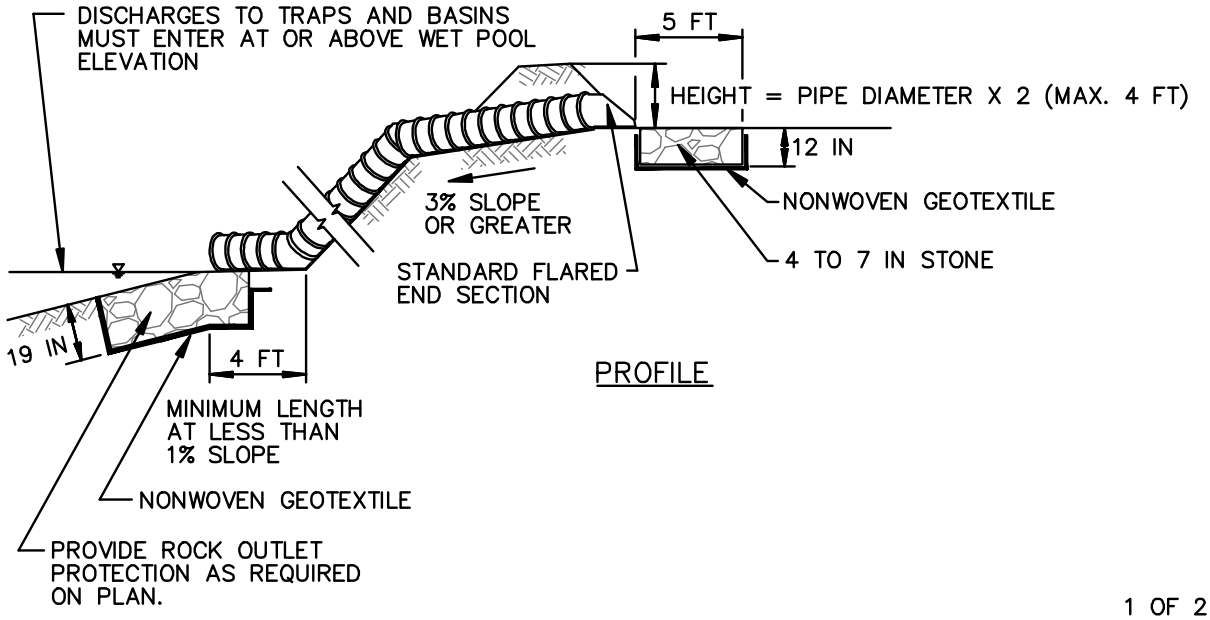

PROFILE

1 OF 2

MARYLAND STANDARDS AND SPECIFICATIONS FOR SOIL EROSION AND SEDIMENT CONTROL

U.S. DEPARTMENT OF AGRICULTURE NATURAL RESOURCES CONSERVATION SERVICE	2011	MARYLAND DEPARTMENT OF ENVIRONMENT WATER MANAGEMENT ADMINISTRATION

DETAIL D-1 PIPE SLOPE DRAIN

STANDARD SYMBOL

PSD – 12

DESIGNATION PSD–12 REFERS TO 12 IN PIPE SLOPE DRAIN.

CONSTRUCTION SPECIFICATIONS

1. THE HEIGHT OF THE EARTH DIKE MUST BE AT LEAST 2 TIMES THE PIPE DIAMETER MEASURED FROM THE INVERT OF THE PIPE. EXTEND THE TOP ELEVATION OF DIKE AT ZERO PERCENT GRADE UNTIL IT INTERCEPTS THE TOP OF THE ADJOINING EARTH DIKE.
2. FLEXIBLE PIPE IS PREFERRED. HOWEVER, CORRUGATED METAL PIPE OR EQUIVALENT PVC PIPE CAN BE USED. ALL CONNECTIONS MUST BE WATERTIGHT.
3. ATTACH A FLARED END SECTION TO THE INLET END OF PIPE WITH A WATERTIGHT CONNECTION. AT THE INLET OF THE PIPE SLOPE DRAIN, INSTALL 4 TO 7 INCH STONE OR EQUIVALENT RECYCLED CONCRETE PLACED 12 INCHES IN DEPTH ON NONWOVEN GEOTEXTILE AND EXTEND OUT 5 FEET FROM THE INLET IN ALL DIRECTIONS.
4. PROVIDE NONWOVEN GEOTEXTILE, AS SPECIFIED IN SECTION H–1 MATERIALS, UNDER THE BOTTOM AND ALONG SIDES OF ALL RIPRAP.
5. SECURELY ANCHOR THE PIPE SLOPE DRAIN (PSD) TO THE SLOPE. SPACE THE ANCHORS EVERY 10 FEET.
6. HAND TAMP THE SOIL AROUND AND UNDER THE PIPE AND END SECTION IN 4 INCH LIFTS TO THE TOP OF THE EARTH DIKE.
7. UPON COMPLETING INSTALLATION OF THE PSD, STABILIZE ASSOCIATED DISTURBANCES WITH SEED, MULCH, AND TACK.
8. INSTALL OUTLET PROTECTION AS SPECIFIED ON APPROVED PLAN.
9. KEEP POINTS OF INFLOW AND OUTFLOW FREE OF EROSION. MAINTAIN WATER TIGHT CONNECTIONS AND POSITIVE DRAINAGE. REMOVE ACCUMULATED SEDIMENT AND DEBRIS.

D-2 STANDARDS AND SPECIFICATIONS

FOR

STONE CHECK DAM

Definition

A stone weir placed in a swale.

Purpose

To reduce runoff velocities and prevent channel erosion in drainage courses.

Conditions Where Practice Applies

Stone check dams are used in swales where channel velocity exceeds 4 feet per second and channel protection (e.g., matting or rip-rap) is not provided.

Design Criteria

1. This practice is not to be used as a sediment trapping device. Sediment-laden runoff must pass through a sediment trapping practice prior to being discharged from the site.

2. Velocity calculations are to be based on the 2-year, 24-hour frequency storm event.

3. Locate stone check dam(s) to provide maximum velocity reduction. This may be achieved by considering the volume of runoff, the drainage area, and the slope. Place stone check dams in reasonably straight sections of the flow channel to minimize the potential for erosion in the channel bend.

4. The height of the stone outlet weir crest must not exceed one-half the depth of the swale. Additionally, the maximum height to the weir crest must not exceed 2 feet to prevent scour at the toe of the dam. The stone check dam must extend from bank to bank of the swale with the weir section length in the center of the dam. If these provisions cannot be met, an engineering analysis must be conducted.

5. The number of check dams will depend on the length and slope of the swale. The distance between the stone check dams will vary with the longitudinal slope.

6. The required spacing is determined by the following formula or Figure D.1:

$$X = \frac{Y}{S}$$

where:

X = check dam spacing (ft)
Y = check dam height (ft)
S = natural channel slope (ft/ft)

The spacing requirements do not change significantly with varying channel cross sections but are more sensitive to the channel slope and height of the check dam.

Maintenance

The stone check dam is not a sediment trapping practice; however, some sediment may accumulate behind the check dam. Accumulated sediment must be removed when it reaches one-half of the height of the weir crest. Line, grade, and cross section must be maintained.

Check Dam Removal

In temporary swales and channels, remove check dam(s) when no longer needed. In permanent channels, check dams may be removed when permanent lining is installed. In the case of grass-lined channels, check dam may be removed when the grass has matured sufficiently to protect the swale or channel. Seed and install soil stabilization matting or sod in the areas disturbed by the removal of the check dam.

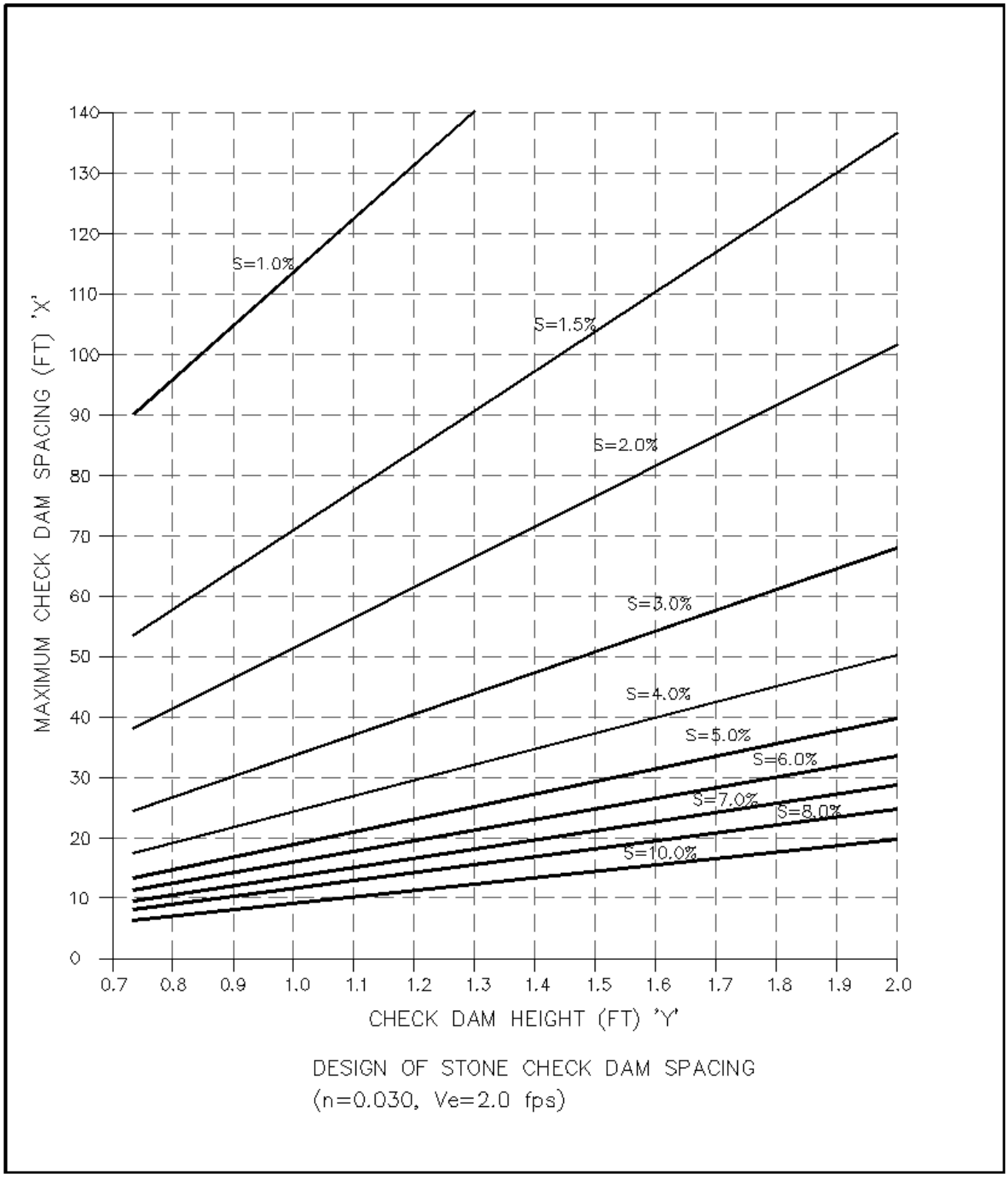

Figure D.1: Check Dam Spacing and Height

DETAIL D-2 STONE CHECK DAM

STANDARD SYMBOL

CD

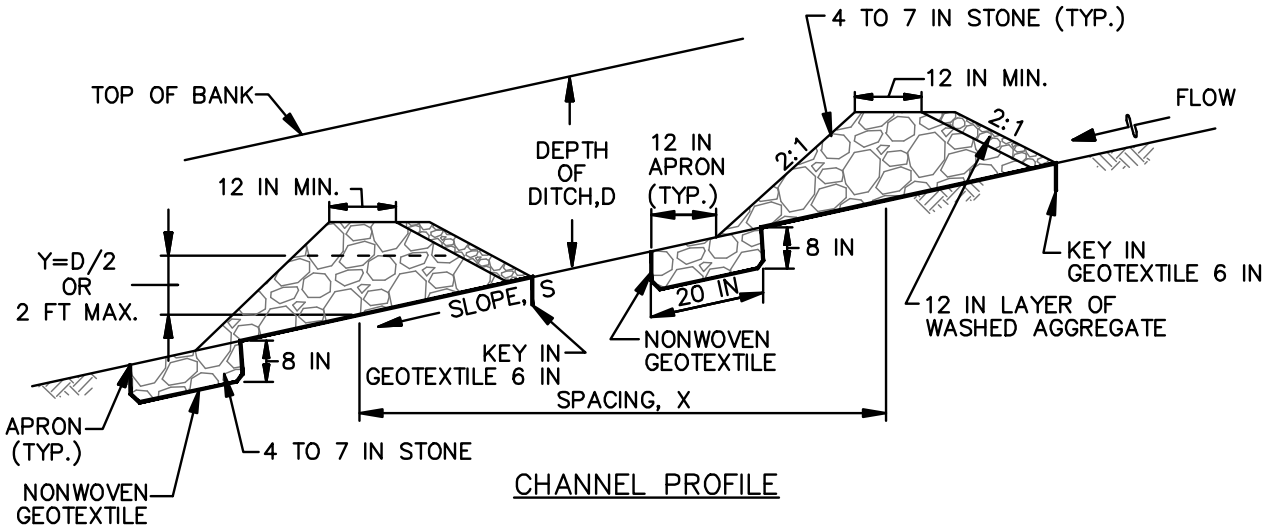

CHANNEL PROFILE

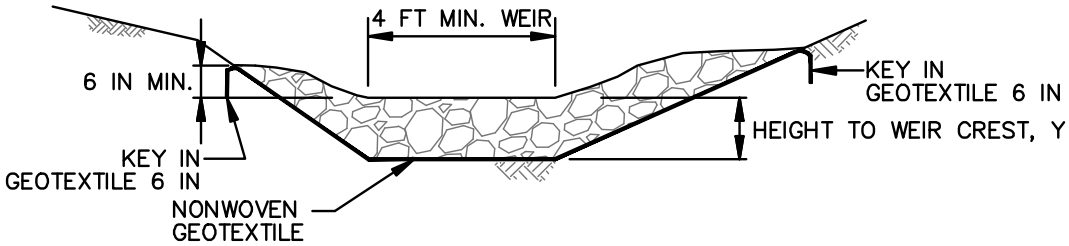

CROSS SECTION

CONSTRUCTION SPECIFICATIONS

1. PREPARE SWALES IN ACCORDANCE WITH THE CONSTRUCTION SPECIFICATIONS DESCRIBED IN SECTION C–2, STANDARDS AND SPECIFICATIONS FOR TEMPORARY SWALE, OR AS SPECIFIED ON PLAN.

2. PLACE NONWOVEN GEOTEXTILE, AS SPECIFIED IN SECTION H–1 MATERIALS, UNDER THE BOTTOM AND SIDES OF THE DAM PRIOR TO PLACEMENT OF STONE. CONSTRUCT THE CHECK DAM WITH WASHED 4 TO 7 INCH STONE OR EQUIVALENT RECYCLED CONCRETE (WITHOUT REBAR) WITH SIDE SLOPES OF 2:1 OR FLATTER AND A MINIMUM TOP WIDTH OF 12 INCHES. PLACE THE STONE SO THAT IT COMPLETELY COVERS THE WIDTH OF THE CHANNEL AND CHANNEL BANKS. FORM THE WEIR SO THAT TOP OF THE OUTLET CREST IS APPROXIMATELY 6 INCHES LOWER THAN THE OUTER EDGES. LINE THE UPSTREAM FACE OF THE DAM WITH A 1 FOOT THICK LAYER OF WASHED AGGREGATE (¾ TO 1½ INCH).

3. SET THE HEIGHT FOR THE WEIR CREST EQUAL TO ONE–HALF THE DEPTH OF THE CHANNEL OR DITCH. TO AVOID SCOUR THE MAXIMUM HEIGHT OF THE WEIR CREST MUST NOT EXCEED 2.0 FEET.

4. REMOVE ACCUMULATED SEDIMENT WHEN IT REACHES ONE–HALF OF THE HEIGHT OF THE WEIR CREST. MAINTAIN LINE, GRADE, AND CROSS SECTION.

D-3 STANDARDS AND SPECIFICATIONS

FOR

INFLOW PROTECTION

D-3-1 RIPRAP INFLOW PROTECTION

Definition

A flow channel lined with rock or recycled concrete equivalent.

Purpose

To provide stable conveyance of concentrated runoff into sediment trapping practices or down steep slopes.

Conditions Where Practice Applies

Where the slope of the inflow channel is steeper than 10:1 but flatter than 4:1. Runoff may be directed to the inflow channel by means of dikes or swales.

Design Criteria

1. Drainage area is limited to 10 acres. For larger drainage areas an engineered design must be provided based on adequate and non-erosive flow of runoff from the 2-year storm.

2. This practice may be used for permanent riprap inflow protection when design computations are provided demonstrating adequate and non-erosive conveyance of the 10-year storm. Recycled concrete equivalent must not be used in permanent applications.

3. Slopes flatter than 10:1 may be stabilized in accordance with temporary swale or earth dike criteria, as applicable. For slopes steeper than 4:1, use gabion inflow protection.

Maintenance

The line, grade, and cross section must be maintained. Accumulated sediment and debris must be removed. The points of inflow and outflow must be kept free of erosion.

DETAIL D-3-1 RIPRAP INFLOW PROTECTION

STANDARD SYMBOL

RRP

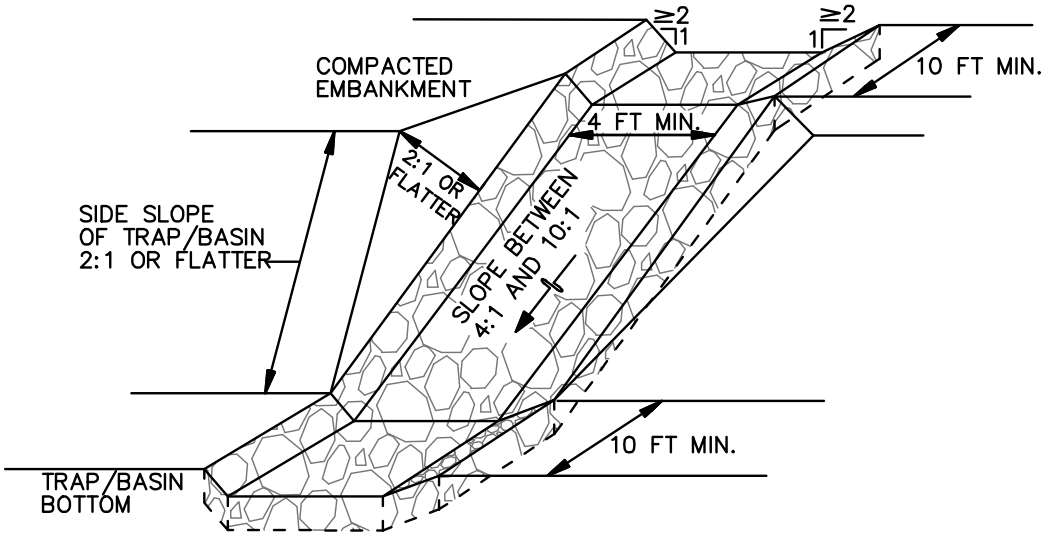

ISOMETRIC VIEW

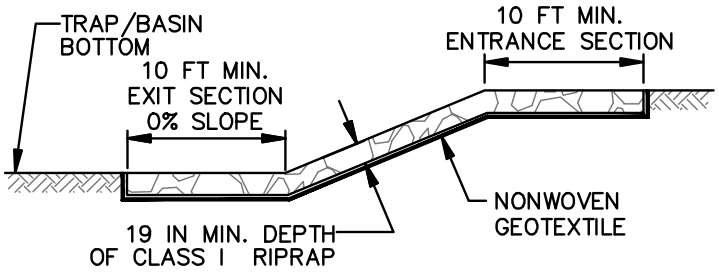

PROFILE ALONG CENTERLINE

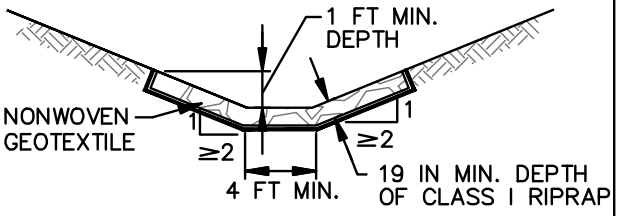

CROSS SECTION

CONSTRUCTION SPECIFICATIONS

1. PROVIDE NONWOVEN GEOTEXTILE, AS SPECIFIED IN SECTION H–1 MATERIALS, UNDER THE BOTTOM AND ALONG SIDES OF ALL RIPRAP.
2. CONSTRUCT INFLOW CHANNEL WITH CLASS I RIPRAP OR EQUIVALENT RECYCLED CONCRETE LINING TO A MINIMUM DEPTH OF 19 INCHES (2 x D_{50}) AND A 1 FOOT DEEP FLOW CHANNEL. INFLOW RIPRAP PROTECTION CHANNEL MUST HAVE A TRAPEZOIDAL CROSS SECTION WITH 2:1 OR FLATTER SIDE SLOPES AND A 4 FOOT MINIMUM BOTTOM WIDTH.
3. INSTALL ENTRANCE AND EXIT SECTIONS AS SHOWN ON THE PROFILE.
4. BLEND RIPRAP INTO EXISTING GROUND.
5. MAINTAIN LINE, GRADE, AND CROSS SECTION. REMOVE ACCUMULATED SEDIMENT AND DEBRIS. KEEP POINTS OF INFLOW AND OUTFLOW FREE OF EROSION.

D-3-2 STANDARDS AND SPECIFICATIONS

FOR

GABION INFLOW PROTECTION

Definition

A flow channel lined with wire baskets (gabions) filled with rock.

Purpose

To provide stable conveyance of concentrated runoff into sediment trapping practices or down steep slopes.

Conditions Where Practice Applies

Where the slope of the inflow channel is 4:1 or steeper. Runoff may be directed to the inflow channel by means of dikes or swales.

Design Criteria

1. The drainage area is limited to 10 acres. For larger drainage areas an engineered design must be provided based on adequate and non-erosive flow of runoff from the 2-year storm.

2. This practice may be used for permanent inflow protection when design computations are provided demonstrating adequate and non-erosive conveyance of the 10-year storm.

3. For slopes between 4:1 and 10:1, use riprap inflow protection. The maximum allowable inflow channel slope is 2:1.

Maintenance

The line, grade, and cross section must be maintained. Accumulated sediment and debris must be removed. The points of inflow and outflow must be kept free of erosion.

DETAIL D-3-2 GABION INFLOW PROTECTION

STANDARD SYMBOL

GP

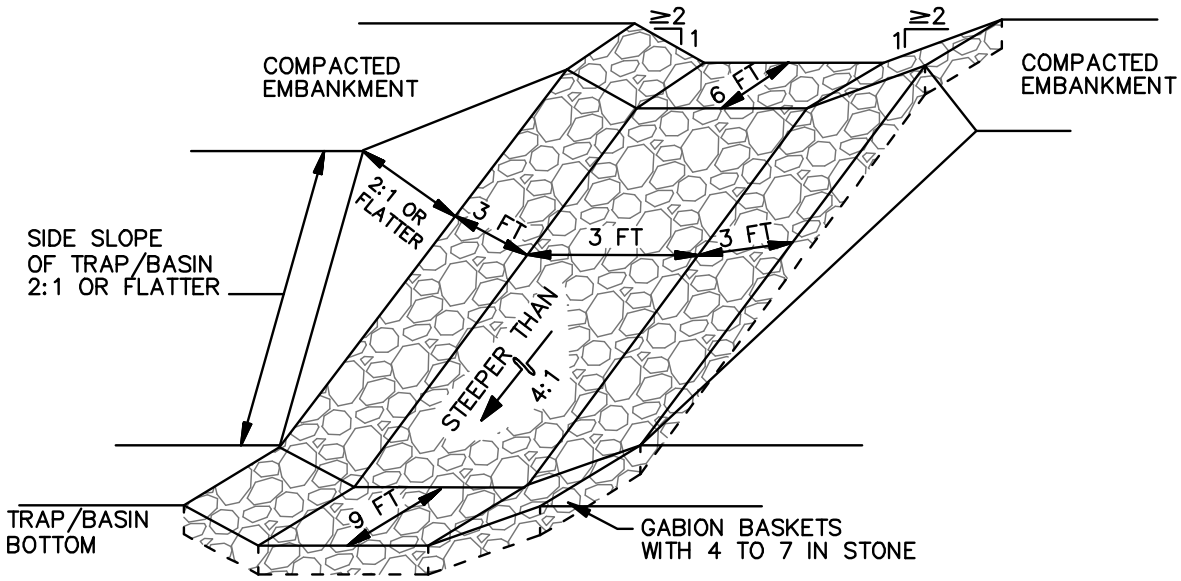

ISOMETRIC VIEW

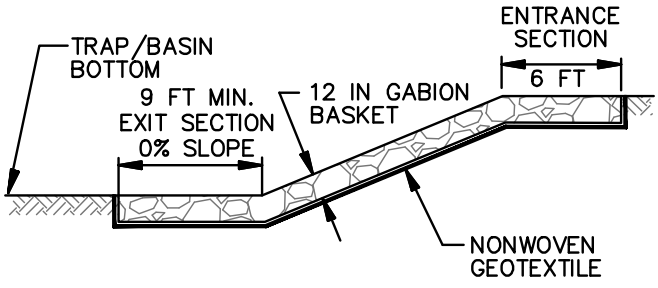

PROFILE ALONG CENTERLINE

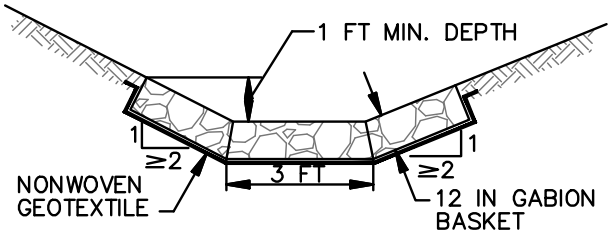

CROSS SECTION

CONSTRUCTION SPECIFICATIONS

1. PROVIDE NONWOVEN GEOTEXTILE, AS SPECIFIED IN SECTION H–1 MATERIALS, UNDER THE BOTTOM AND ALONG SIDES OF ALL GABION BASKETS.
2. USE BASKETS MADE OF MINIMUM 11 GAUGE WIRE.
3. CONSTRUCT GABION INFLOW PROTECTION BY ARRANGING 9 X 3 X 1 FOOT GABION BASKETS TO FORM A TRAPEZOIDAL SECTION WITH A 3 FOOT BOTTOM WIDTH, 1 FOOT MINIMUM DEPTH, 3 FOOT SIDE WALLS, AND 2:1 OR FLATTER SIDE SLOPES. FILL GABION BASKETS WITH 4 TO 7 INCH STONE OR EQUIVALENT RECYCLED CONCRETE WITHOUT REBAR OR WEIR MESH.
4. INSTALL ENTRANCE AND EXIT SECTIONS AS SHOWN ON THE PROFILE.
5. INSTALL GABIONS IN ACCORDANCE WITH MANUFACTURER RECOMMENDATIONS.
6. BLEND GABIONS INTO EXISTING GROUND.
7. MAINTAIN LINE, GRADE, AND CROSS SECTION. REMOVE ACCUMULATED SEDIMENT AND DEBRIS. KEEP POINTS OF INFLOW AND OUTFLOW FREE OF EROSION

D-4 STANDARDS AND SPECIFICATIONS

FOR

OUTLET PROTECTION

D-4-1 ROCK OUTLET PROTECTION

Definition

Rock apron placed at the outfall of channels or culverts or other points of concentrated discharge.

Purpose

To reduce the velocity of the discharge from the outfall to a non-erosive rate.

Conditions Where Practice Applies

Where discharge velocities and energy at outlets are sufficient to erode the next downstream reach. This applies to outlets of all types such as sediment basins, stormwater management ponds, and road culverts. Rock outlet protection may be temporary or permanent.

There are three types of standard rock outlet protection (ROP): ROP I, ROP II, and ROP III. Designing suitable outlet protection is based on the geometry of the receiving channel or outlet, size of the outflow pipe, flow rate, flow depth, and tailwater considerations.

Design Criteria

The design method presented here applies to sizing rock riprap to protect a downstream area. It does not apply to rock lining of channels or streams. The design of rock outlet protection depends entirely on the location. Rock aprons cannot protect pipe outlets at the top of cuts or on slopes steeper than ten percent due to re-concentration of flow and high velocities encountered after the flow leaves the apron. The rock outlet protection is to be designed for the same storm as the conveyance discharging to it. For permanent rock outlet protection, the minimum design storm is the 10-year, 24-hour storm.

Be aware that certain counties and State agencies have additional regulations and design procedures established for dimensions, type and size of materials, and locations where outlet protection is required.

1. Tailwater Depth. The depth of tailwater immediately below the pipe outlet must be determined for the design capacity of the pipe. If the tailwater depth is less than half the diameter of the outlet pipe and the receiving stream is wide enough to accept divergence of the flow, it is classified as a Minimum Tailwater Condition. If the tailwater depth is greater than half the pipe diameter and the receiving stream will continue to confine the flow, it is classified as a Maximum Tailwater Condition. Pipes that outlet onto flat areas with no defined channel may be assumed to have Minimum Tailwater Condition.

2. Apron Type. Determine the apron type based on the outlet channel conditions.

   a. Use Rock Outlet Protection I where the discharge is to a semi-confined section.

   b. Use Rock Outlet Protection II where the discharge is to a well defined channel. Where

discharge is perpendicular to the channel, extend the apron across the channel bottom and up the channel banks to an elevation one (1) foot above the maximum tailwater depth or to the top of the bank, whichever is less.

c. Use Rock Outlet Protection III where the discharge is to a flat area.

Note: Where no endwall is used, construct the upstream end of the apron so that the width is two times the diameter of the outlet pipe, and extend the stone under the outlet by a minimum of 18 inches. Where an end section is used, the upstream end of the apron must conform to the end section.

3. Apron Size. Determine the apron length and width from the curves according to the tailwater condition:

Minimum Tailwater: use Figure D.2
Maximum Tailwater: use Figure D.3

4. Bottom Grade. Construct the outlet protection apron with no slope along its length and with no obstruction at the end of the apron. Tie the elevation of the downstream end of the apron to the elevation of the receiving channel or adjacent ground.

5. Alignment. Locate the outlet protection apron so that there are no bends in the horizontal alignment.

6. Materials. Riprap must be composed of a well graded mixture of stone sized so that fifty (50) percent of the pieces, by weight, are larger than the size determined by using the charts. A well graded mixture, as used herein, is defined as a mixture composed primarily of larger stone sizes but with a sufficient mixture of other sizes to fill the smaller voids between the stones. The diameter of the largest stone in such a mixture must not exceed the respective d_{100} selected from Table D.2. The d_{50} refers to the median diameter of the stone. This is the size for which 50 percent, by weight, will be smaller and 50 percent will be larger.

7. Thickness. For riprap specifications the following values are used:

Table D.2: Riprap Sizes and Thickness

Class	d_{50}	d_{100}	Thickness (T)
Class I	9.5 inches	15 inches	19 inches
Class II	16 inches	24 inches	32 inches
Class III	23 inches	34 inches	46 inches

8. Stone Quality. Stone for riprap must be field stone or rough and hewn quarry stone. The stone must be hard and angular and of a quality that will not disintegrate with exposure to water or weathering. The specific gravity of the individual stones is to be at least 2.5. Recycled concrete equivalent may be used provided it has a density of at least 150 pounds per cubic foot and does not have any exposed steel or reinforcing bars.

9. Filter. A filter is a layer of material placed between the riprap and the underlying soil surface used to prevent soil movement into and through the riprap, prevent piping, reduce uplift pressure, and collect water. Riprap must have a filter placed under it in all cases. A filter may be of two general forms: either a gravel layer or nonwoven geotextile.

10. Plans. The plan must include all the information necessary to properly construct the designed rock outlet protection. At a minimum the following information must be provided on the plan for each rock outlet protection:

    a. Type (ROP I, II, or III).
    b. Riprap size (Class I, II or III).
    c. Width, W; length, L_a; thickness, T.
    d. Minimum height of riprap, H.

Design Procedure

1. Investigate the downstream channel to assure that non-erosive velocities can be maintained.

2. Determine the rock outlet protection type (ROP I, II, or III) based on the discharge channel conditions.

3. Determine the tailwater condition at the outlet to establish which chart to use. (For minimum tailwater condition use Figure D.2. For maximum tailwater condition use Figure D.3.)

4. Enter the appropriate chart with the pipe diameter (d) and discharge rate (Q) or depth of flow (d) and discharge velocity (v) to determine the riprap size (d_{50}) and apron length (L_a) required. References to pipe diameters in the charts are based on full flow. For other than full pipe flow, the parameters of depth of flow and velocity must be used. (Refer to the example on Figure D.2 illustrating how to read the chart.) Interpolate between curves for velocities and depth not shown on chart. Do not extrapolate length of curves.

5. Calculate apron width (W) at the downstream end if a flared section is to be employed.

   For minimum tailwater: $W \geq \text{diameter} + L_a$
   For maximum tailwater: $W \geq \text{diameter} + 0.4L_a$

6. Determine the height of riprap. The riprap at the sides of the apron needs to extend up to a height, H, equal to the maximum depth of flow. For ROP I under maximum tailwater conditions, the maximum depth of flow is the pipe diameter or the tailwater depth, whichever is greater. For ROP II under maximum tailwater conditions, the maximum depth of flow equals the downstream normal depth or the discharge depth, whichever is greater. For minimum tailwater conditions, H= the discharge depth or d/2, whichever is greater.

Examples

Example 1: Pipe Flow (Full) with Discharge to Unconfined Section:
Q = 280 cfs; diameter = 66 inches; tailwater is 2 feet above pipe invert.

Because the outfall is unconfined, use Rock Outlet Protection III.
Tw < ½ d, therefore minimum tailwater condition controls.

On Figure D.2 for Q = 280 cfs and d = 66 inches, read d_{50} = 1.2 feet (14 inches). Then moving up to the d = 66 curve above, read apron length, L_a = 38 feet.
Since d_{50} = 14 inches, use Class II Riprap (d_{50} = 16 inches).

Apron width, W = diameter + L_a = 5.5 feet + 38 feet = 43.5 feet.

Include on the plan: ROP III
Class II riprap
L_a = 38 ft
W = 43.5 ft
T = 32 in
Minimum height of riprap, H = 2.75 ft

Example 2: Pipe Flow (Partial) with Discharge to a Confined Section:

A 48 inch pipe is discharging with a depth of 3 feet; Q = 100 cfs; the discharge velocity = 10 fps (established from partial flow analysis) to a confined trapezoidal channel with a 2 foot bottom width, 2:1 side slopes, n = 0.04, and a grade of 0.6 percent; the discharge enters the channel perpendicularly.

Because the receiving channel is confined, use Rock Outlet Protection II.
Calculations for the downstream channel (using Manning's Equation) indicate a normal depth of 3.1 feet and a normal velocity of 3 fps.
Tw > ½ d, therefore maximum tailwater condition controls.
On Figure D.3, at the intersection of the curves for d = 36 inches and v = 10 fps, read d_{50} = 0.3 feet. Then moving up to the d = 36 inch curve, read apron length, L_a = 30 feet.
Since d_{50} = 3.6 inches, use Class I riprap (d_{50} = 9.5 inches).

Apron width, W = pipe diameter + 0.4 L_a = 4 feet + (0.4) (30 feet) = 16 feet.

Since the maximum flow depth in this reach is 3.1 feet and the discharge is perpendicular to the channel, the minimum height of the riprap is 4.1 feet (3.1 ft + 1 ft of freeboard). The apron needs to be extended across the channel bottom and up the channel banks to 4.1 feet.

Include on the plan: ROP II
Class I riprap
L_a = 30 ft
W = 16 ft
T = 19 in
Minimum height of riprap, H = 4.1 ft

Example 3: Open Channel Flow with Discharge to Unconfined Section:

A trapezoidal concrete channel 5 feet wide with 2:1 side slopes; flow 2 feet deep; Q = 180 cfs (velocity = 10 fps); and the tailwater (surface) downstream 0.8 feet.

Because the outlet is unconfined, use Rock Outlet Protection III.
Tw < ½ d channel flow depth, therefore minimum tail water condition controls.
On Figure D.2, at the intersection of the curves for d = 24 inches and v = 10 fps, read d_{50} = 0.7 feet. Then moving up to the d = 24 inch curve, read apron length, L_a = 22 feet.
Since d_{50} = 8.4 inches, use Class I riprap (d_{50} = 9.5 inches).

Apron width, W = bottom of width of channel + L_a = 5 feet + 22 feet = 27 feet.

Include on the plan: ROP III
Class I riprap
L_a = 22 ft
W = 27 ft
T = 19 in
Minimum height of riprap, H = 2 ft

Example 4: Box Culvert Flow (Partial) to a Well Defined Channel Section:

A concrete box culvert 5.5 feet (height) x 10 feet (width); flow 5 feet deep under partial flow conditions; Q = 600 cfs; and the tailwater (surface) 5 feet above invert.

Because the channel is well defined, use Rock Outlet Protection II.

Tw > ½ d, therefore maximum tailwater condition controls.

V = Q/A = 600 cfs/(5 ft x 10 ft) = 12 fps

On Figure D.3, at the intersection of the curve for d = 60 inches and the interpolated curve for v = 12 fps, read d_{50} = 0.4 feet. Then moving up to the d = 60 curve, read apron length, L_a = 40 feet.

Since d_{50} = 4.8 inches, use Class I riprap (d_{50} = 9.5 inches).

Apron width, W = conduit width + 0.4 L_a = 10 feet + (0.4)(40 feet) = 26 feet.

Include on the plan:
- ROP II
- Class I riprap
- L_a = 40 ft
- W = 26 ft
- T = 19 in
- Minimum height of riprap, H = 5 ft

Maintenance

Maintenance needs are generally low on rock outlet protection. The line, grade, and cross section must be maintained, and the outlet must be kept free of erosion. After high flows inspect for scour and dislodged riprap. Repairs must be made immediately. Accumulated sediment and debris must be removed.

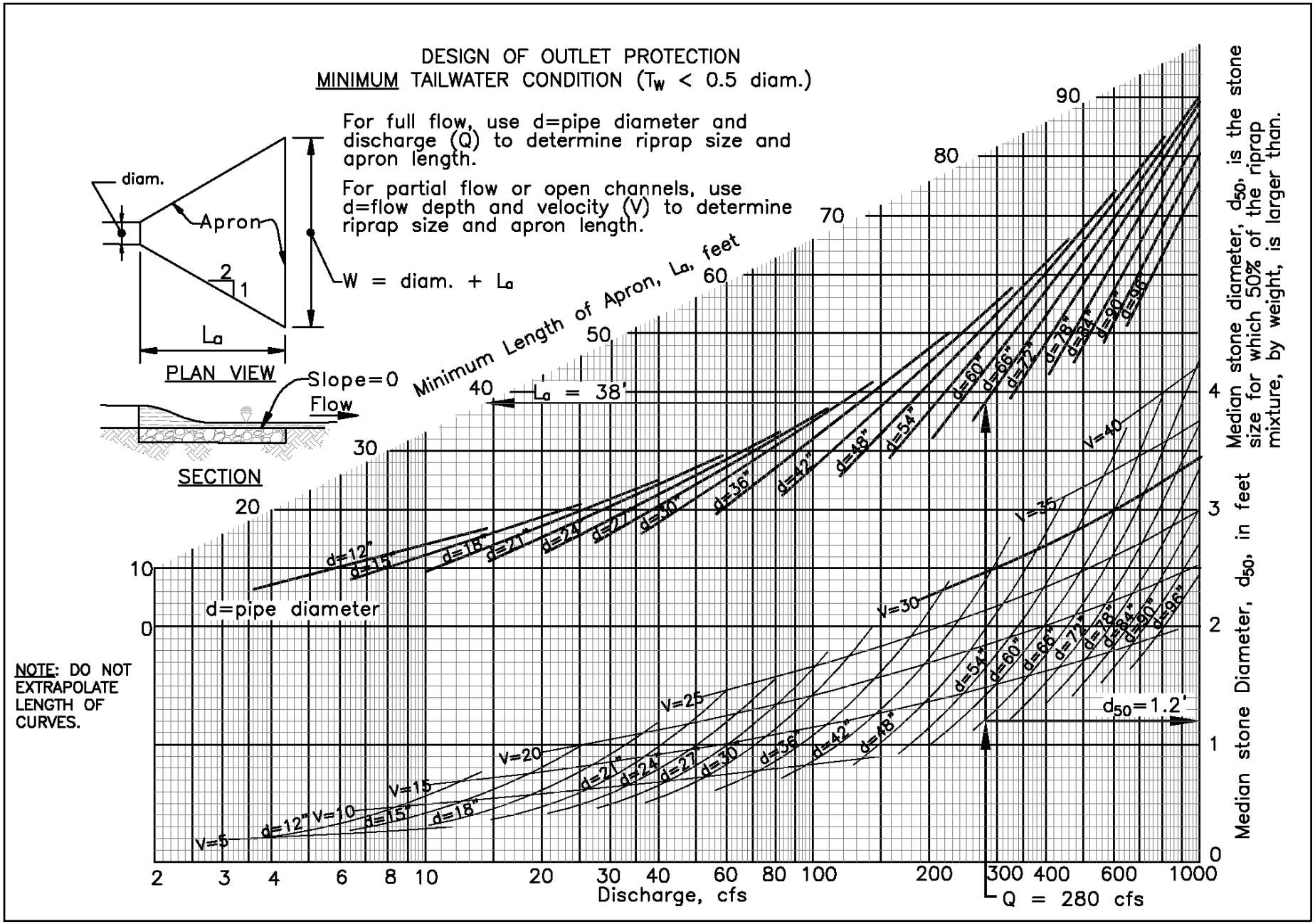

Figure D.2: Design of Outlet Protection – Minimum Tailwater Condition

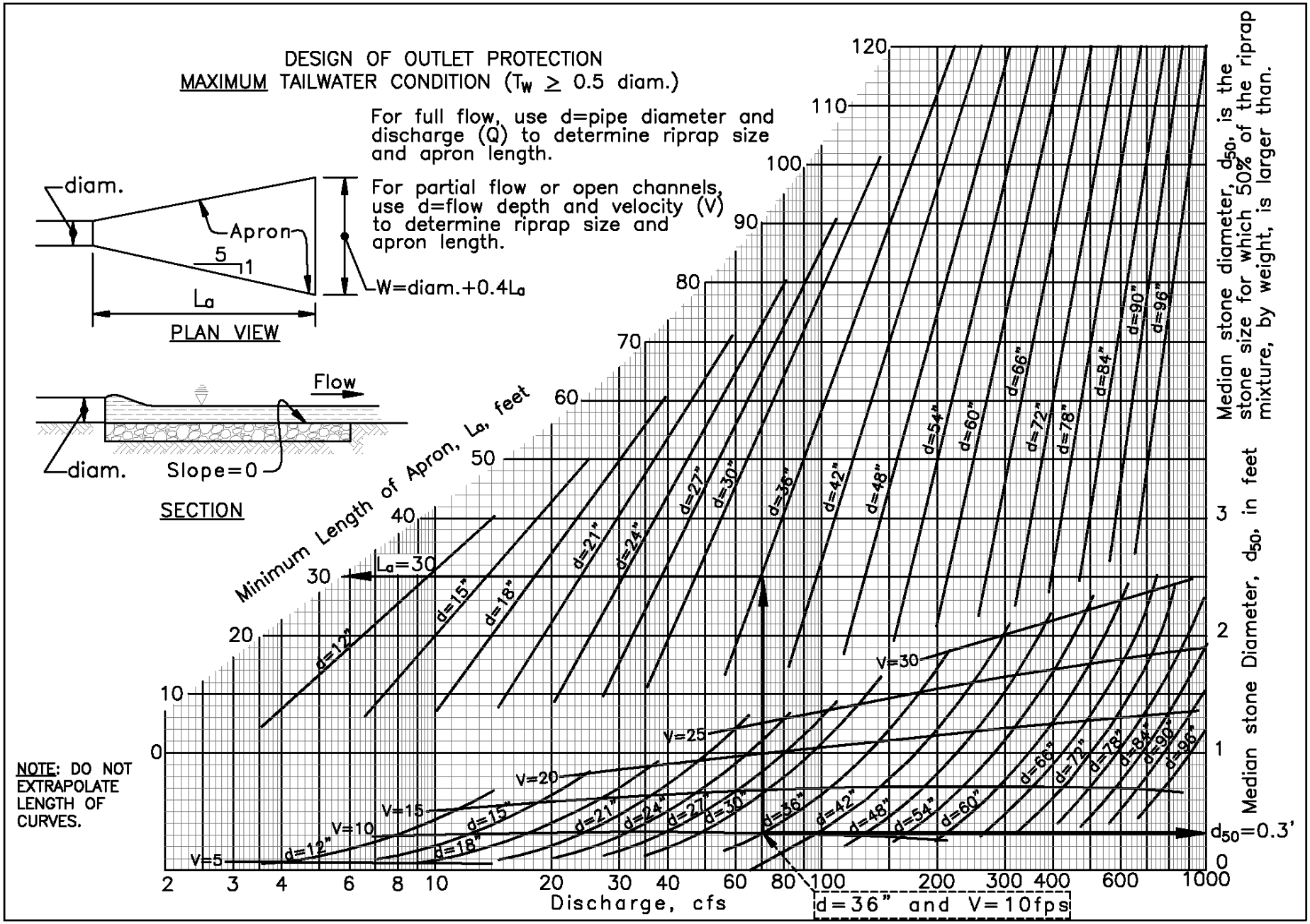

Figure D.3: Design of Outlet Protection – Maximum Tailwater Condition

DETAIL D-4-1-A ROCK OUTLET PROTECTION I

STANDARD SYMBOL

ROP1

DISCHARGE TO SEMI CONFINED CHANNEL SECTION

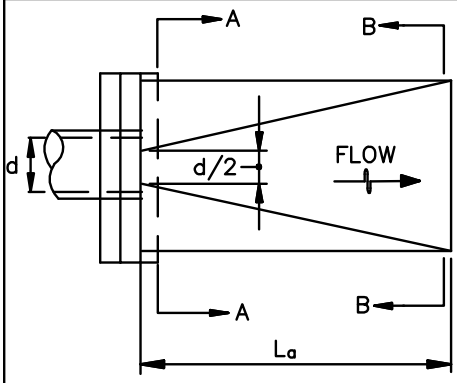

PLAN VIEW

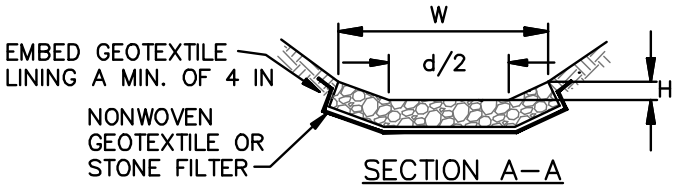

SECTION A–A

CHANNEL CROSS SECTION WILL TRANSITION FROM A–A TO B–B

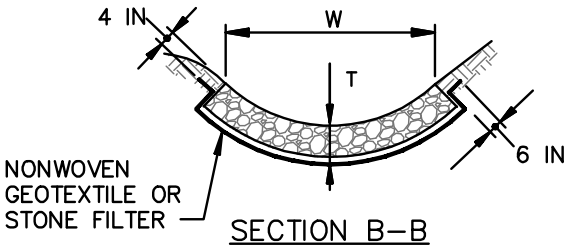

SECTION B–B

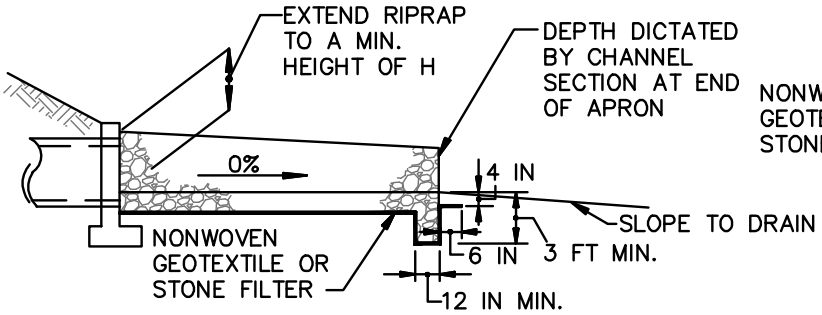

PROFILE

RIPRAP	
CLASS	THICKNESS (T)
I	19 IN
II	32 IN
III	46 IN

CONSTRUCTION SPECIFICATIONS

1. RIPRAP AND STONE MUST CONFORM TO THE SPECIFIED CLASS.

2. USE NONWOVEN GEOTEXTILE AS SPECIFIED IN SECTION H–1 MATERIALS, AND PROTECT FROM PUNCTURING, CUTTING, OR TEARING. REPAIR ANY DAMAGE OTHER THAN AN OCCASIONAL SMALL HOLE BY PLACING ANOTHER PIECE OF GEOTEXTILE OVER THE DAMAGED PART OR BY COMPLETELY REPLACING THE GEOTEXTILE. PROVIDE A MINIMUM OF ONE FOOT OVERLAP FOR ALL REPAIRS AND FOR JOINING TWO PIECES OF GEOTEXTILE TOGETHER.

3. PREPARE THE SUBGRADE FOR GEOTEXTILE OR STONE FILTER (⅜ TO 1½ INCH STONE FOR 6 INCH MINIMUM DEPTH) AND RIPRAP TO THE REQUIRED LINES AND GRADES. COMPACT ANY FILL REQUIRED IN THE SUBGRADE TO A DENSITY OF APPROXIMATELY THAT OF THE SURROUNDING UNDISTURBED MATERIAL.

4. EXTEND GEOTEXTILE AT LEAST 6 INCHES BEYOND EDGES OF RIPRAP AND EMBED AT LEAST 4 INCHES AT SIDES OF THE RIPRAP.

5. CONSTRUCT RIPRAP OUTLET TO FULL COURSE THICKNESS IN ONE OPERATION AND IN SUCH A MANNER AS TO AVOID DISPLACEMENT OF UNDERLYING MATERIALS. PLACE STONE FOR RIPRAP OUTLET IN A MANNER THAT WILL ENSURE THAT IT IS REASONABLY HOMOGENOUS WITH THE SMALLER STONES AND SPALLS FILLING THE VOIDS BETWEEN THE LARGER STONES. PLACE RIPRAP IN A MANNER TO PREVENT DAMAGE TO THE STONE FILTER BLANKET OR GEOTEXTILE. HAND PLACE TO THE EXTENT NECESSARY.

6. WHERE NO ENDWALL IS USED, CONSTRUCT THE UPSTREAM END OF THE APRON SO THAT THE WIDTH IS TWO TIMES THE DIAMETER OF THE OUTLET PIPE, AND EXTEND THE STONE UNDER THE OUTLET BY A MINIMUM OF 18 INCHES.

7. CONSTRUCT APRON WITH 0% SLOPE ALONG ITS LENGTH AND WITHOUT OBSTRUCTIONS. PLACE STONE SO THAT IT BLENDS IN WITH EXISTING GROUND.

8. MAINTAIN LINE, GRADE, AND CROSS SECTION. KEEP OUTLET FREE OF EROSION. REMOVE ACCUMULATED SEDIMENT AND DEBRIS. AFTER HIGH FLOWS INSPECT FOR SCOUR AND DISLODGED RIPRAP. MAKE NECESSARY REPAIRS IMMEDIATELY.

DETAIL D-4-1-B ROCK OUTLET PROTECTION II

STANDARD SYMBOL

ROPII

DISCHARGE TO CONFINED CHANNEL SECTION

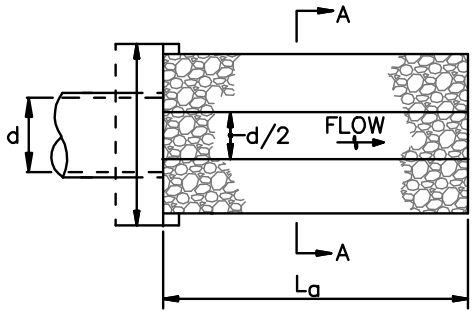

PLAN VIEW

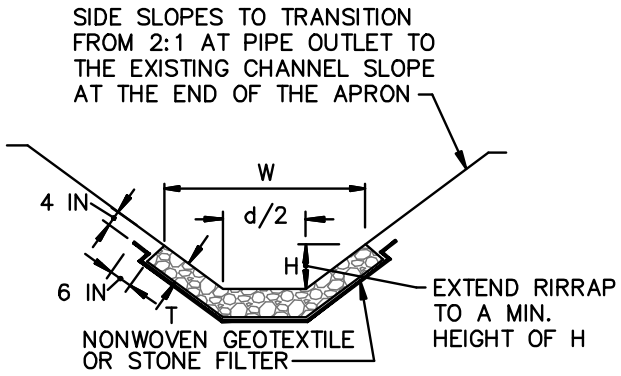

SECTION A–A

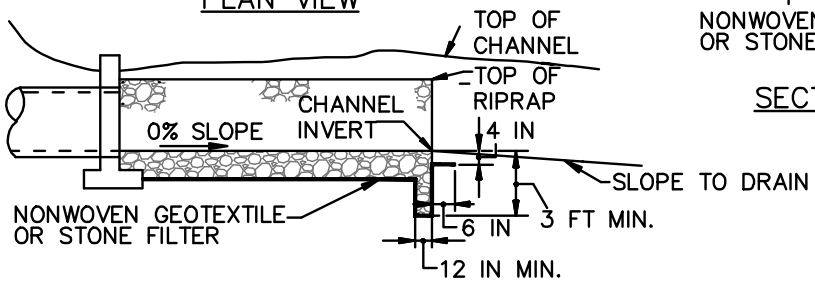

PROFILE

RIPRAP	
CLASS	THICKNESS (T)
I	19 IN
II	32 IN
III	46 IN

CONSTRUCTION SPECIFICATIONS

1. RIPRAP AND STONE MUST CONFORM TO THE SPECIFIED CLASS.

2. USE NONWOVEN GEOTEXTILE AS SPECIFIED IN SECTION H–1 MATERIALS, AND PROTECT FROM PUNCTURING, CUTTING, OR TEARING. REPAIR ANY DAMAGE OTHER THAN AN OCCASIONAL SMALL HOLE BY PLACING ANOTHER PIECE OF GEOTEXTILE OVER THE DAMAGED PART OR BY COMPLETELY REPLACING THE GEOTEXTILE. PROVIDE A MINIMUM OF ONE FOOT OVERLAP FOR ALL REPAIRS AND FOR JOINING TWO PIECES OF GEOTEXTILE TOGETHER.

3. PREPARE THE SUBGRADE FOR GEOTEXTILE OR STONE FILTER (⅜ TO 1½ INCH STONE FOR 6 INCH MINIMUM DEPTH) AND RIPRAP TO THE REQUIRED LINES AND GRADES. COMPACT ANY FILL REQUIRED IN THE SUBGRADE TO A DENSITY OF APPROXIMATELY THAT OF THE SURROUNDING UNDISTURBED MATERIAL.

4. EXTEND GEOTEXTILE AT LEAST 6 INCHES BEYOND EDGES OF RIPRAP AND EMBED AT LEAST 4 INCHES AT SIDES OF RIPRAP.

5. CONSTRUCT RIPRAP OUTLET TO FULL COURSE THICKNESS IN ONE OPERATION AND IN SUCH A MANNER AS TO AVOID DISPLACEMENT OF UNDERLYING MATERIALS. PLACE STONE FOR RIPRAP OUTLET IN A MANNER THAT WILL ENSURE THAT IT IS REASONABLY HOMOGENOUS WITH THE SMALLER STONES AND SPALLS FILLING THE VOIDS BETWEEN THE LARGER STONES. PLACE RIPRAP IN A MANNER TO PREVENT DAMAGE TO THE STONE FILTER BLANKET OR GEOTEXTILE. HAND PLACE TO THE EXTENT NECESSARY.

6. WHERE NO ENDWALL IS USED, CONSTRUCT THE UPSTREAM END OF THE APRON SO THAT THE WIDTH IS TWO TIMES THE DIAMETER OF THE OUTLET PIPE, AND EXTEND THE STONE UNDER THE OUTLET BY A MINIMUM OF 18 INCHES.

7. CONSTRUCT APRON WITH 0% SLOPE ALONG ITS LENGTH AND WITHOUT OBSTRUCTIONS. PLACE STONE SO THAT IT BLENDS IN WITH EXISTING GROUND.

8. MAINTAIN LINE, GRADE, AND CROSS SECTION. KEEP OUTLET FREE OF EROSION. REMOVE ACCUMULATED SEDIMENT AND DEBRIS. AFTER HIGH FLOWS INSPECT FOR SCOUR AND DISLODGED RIPRAP. MAKE NECESSARY REPAIRS IMMEDIATELY.

DETAIL D-4-1-C ROCK OUTLET PROTECTION III

STANDARD SYMBOL

ROPIII

DISCHARGE TO AN UNCONFINED CHANNEL OR FLAT AREA

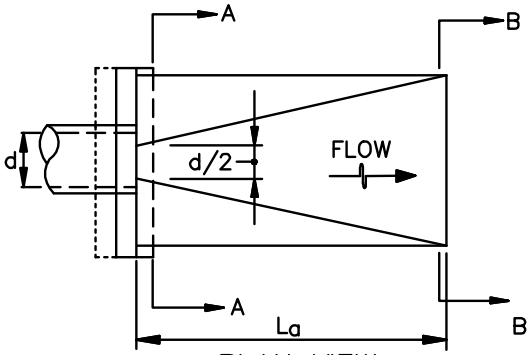

PLAN VIEW

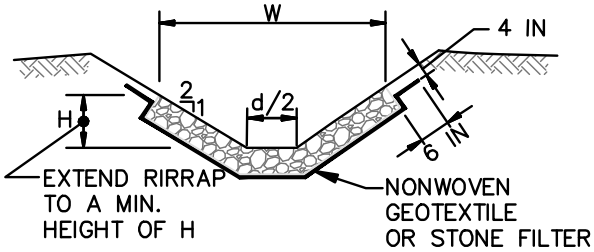

SECTION A–A

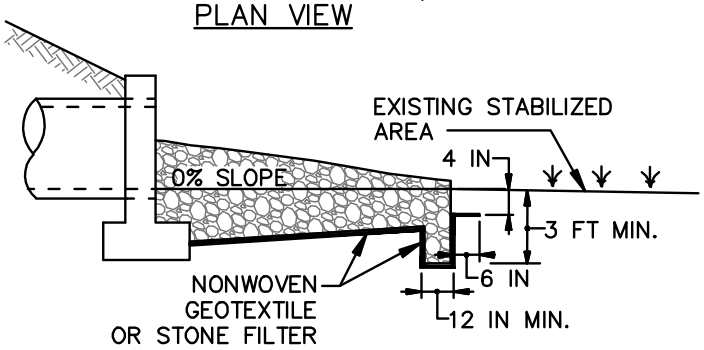

PROFILE

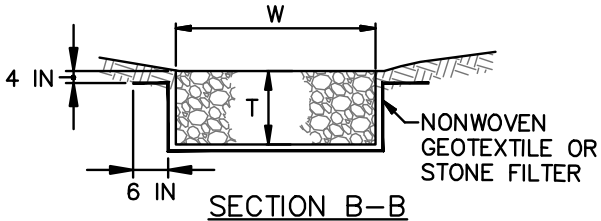

SECTION B–B

RIPRAP	
CLASS	THICKNESS (T)
I	19 IN
II	32 IN
III	46 IN

CONSTRUCTION SPECIFICATIONS

1. RIPRAP AND STONE MUST CONFORM TO THE SPECIFIED CLASS.

2. USE NONWOVEN GEOTEXTILE, AS SPECIFIED IN SECTION H–1 MATERIALS, AND PROTECT FROM PUNCTURING, CUTTING, OR TEARING. REPAIR ANY DAMAGE OTHER THAN AN OCCASIONAL SMALL HOLE BY PLACING ANOTHER PIECE OF GEOTEXTILE OVER THE DAMAGED PART OR BY COMPLETELY REPLACING THE GEOTEXTILE. PROVIDE A MINIMUM OF ONE FOOT OVERLAP FOR ALL REPAIRS AND FOR JOINING TWO PIECES OF GEOTEXTILE TOGETHER.

3. PREPARE THE SUBGRADE FOR GEOTEXTILE OR STONE FILTER (⅜ TO 1½ INCH MINIMUM STONE FOR 6 INCH MINIMUM DEPTH) AND RIPRAP TO THE REQUIRED LINES AND GRADES. COMPACT ANY FILL REQUIRED IN THE SUBGRADE TO A DENSITY OF APPROXIMATELY THAT OF THE SURROUNDING UNDISTURBED MATERIAL.

4. EXTEND GEOTEXTILE AT LEAST 6 INCHES BEYOND EDGES OF RIPRAP AND EMBED AT LEAST 4 INCHES AT SIDES OF RIPRAP.

5. CONSTRUCT RIPRAP OUTLET TO FULL COURSE THICKNESS IN ONE OPERATION AND IN SUCH A MANNER AS TO AVOID DISPLACEMENT OF UNDERLYING MATERIALS. PLACE STONE FOR RIPRAP OUTLET IN A MANNER THAT WILL ENSURE THAT IT IS REASONABLY HOMOGENOUS WITH THE SMALLER STONES AND SPALLS FILLING THE VOIDS BETWEEN THE LARGER STONES. PLACE RIPRAP IN A MANNER TO PREVENT DAMAGE TO THE FILTER BLANKET OR GEOTEXTILE. HAND PLACE TO THE EXTENT NECESSARY.

6. WHERE NO ENDWALL IS USED, CONSTRUCT THE UPSTREAM END OF THE APRON SO THAT THE WIDTH IS TWO TIMES THE DIAMETER OF THE OUTLET PIPE, AND EXTEND THE STONE UNDER THE OUTLET BY A MINIMUM OF 18 INCHES.

7. CONSTRUCT APRON WITH 0% SLOPE ALONG ITS LENGTH AND WITHOUT OBSTRUCTIONS. PLACE STONE SO THAT IT BLENDS IN WITH EXISTING GROUND.

8. MAINTAIN LINE, GRADE, AND CROSS SECTION. KEEP OUTLET FREE OF EROSION. REMOVE ACCUMULATED SEDIMENT AND DEBRIS. AFTER HIGH FLOWS INSPECT FOR SCOUR AND RIPRAP DISLODGED RIPRAP. MAKE NECESSARY REPAIRS IMMEDIATELY.

D-4-2 STANDARDS AND SPECIFICATIONS

FOR

PLUNGE POOL

Definition

An excavated depression lined with riprap and placed at the outfall of a culvert.

Purpose

To dissipate the energy of a discharge and prevent scour at a pipe outfall.

Conditions Where Practice Applies

Where discharge velocity and energy at a pipe outlet is sufficient to erode the downstream channel reach. This applies to outlets of all types such as road culverts, sediment basins, and stormwater management facilities. Plunge pools are an alternative to rock outlet protection and are preferable in locations where space constraints exist. A plunge pool may be temporary or permanent, based on design.

Design Criteria

1. Select type of plunge pool (larger stone required for Type 1):

   Type I: Plunge pool is depressed ½ the size of the culvert rise.
   Type II: Plunge pool is depressed the full height of the culvert rise.

2. Determine the riprap (d_{50}) stone size for the plunge pool type and design storm flow.

   Type I: $d_{50} = (0.0125d^2/Tw) \times (Q/d^{2.5})^{4/3}$
   Type II: $d_{50} = (0.0082d^2/Tw) \times (Q/d^{2.5})^{4/3}$

3. Determine plunge pool dimensions.

   $C = (3 \times d) + (6 \times F)$
   $B = (2 \times d) + (6 \times F)$

   Where: d_{50} = the median stone size in feet (refer to Table H.2: Stone Size)
   d = the culvert diameter or span in feet
   Tw = the tailwater depth in feet
   Q = the design flow for the culvert, minimum 10-year, 24-hour storm, in cfs
   B = the plunge pool width in feet
   C = the plunge pool length in feet
   D = $2 \times d_{50}$ = riprap thickness in feet
   E = the culvert diameter or span in feet equal to d
   3E = the plunge pool bottom length in feet
   2E = the plunge pool bottom width in feet
   F = plunge pool depth in feet = d (for Type II) or 0.5 d (for Type I)

4. For permanent uses, provide a toewall at the downstream end at a depth twice the (D) dimension and at a width equal to the (D) dimension, on nonwoven geotextile. Extend the rip-rap a minimum of 18 inches under the outlet pipe if the outlet does not have a footer or headwall.

5. Provide an underdrain to a suitable outfall if standing water in the plunge pool is an issue or as required by the appropriate approval authority.

6. Provide the design values on the plans for the following dimensions: B, C, D, E, and F.

Maintenance

Maintenance needs are generally low for plunge pools. The line, grade, and cross section must be maintained, and the outlet must be kept free of erosion. After high flows inspect for scour and dislodged riprap. Repairs must be made immediately. Accumulated sediment and debris must be removed.

DETAIL D-4-2 PLUNGE POOL

STANDARD SYMBOL

PP

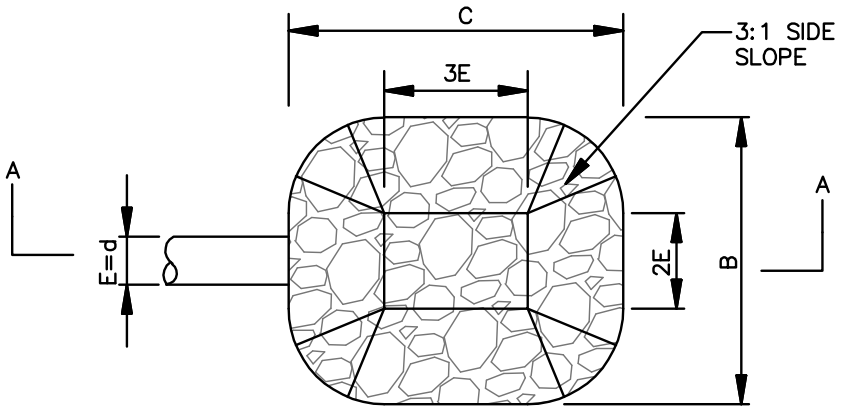

PLAN VIEW

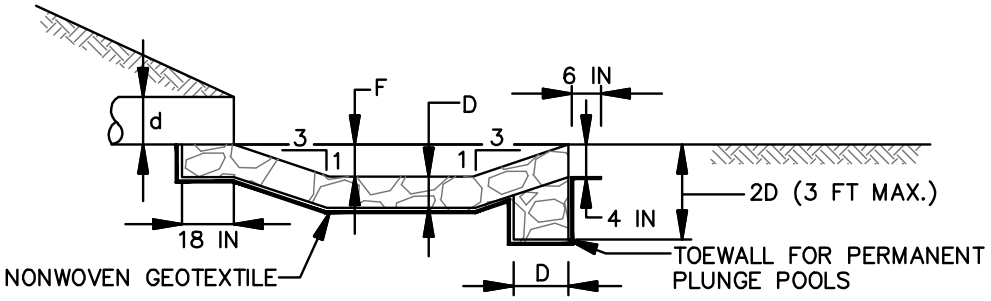

SECTION A–A

CONSTRUCTION SPECIFICATIONS

1. USE SPECIFIED CLASS OF RIPRAP.

2. USE NONWOVEN GEOTEXTILE AS SPECIFIED IN SECTION H–1 MATERIALS, AND PROTECT FROM PUNCHING, CUTTING, OR TEARING. REPAIR ANY DAMAGE OTHER THAN AN OCCASIONAL SMALL HOLE BY PLACING ANOTHER PIECE OF GEOTEXTILE OVER THE DAMAGED PART OR BY COMPLETELY REPLACING THE GEOTEXTILE. PROVIDE A MINIMUM OF ONE FOOT OVERLAP FOR ALL REPAIRS AND FOR JOINING TWO PIECES OF GEOTEXTILE.

3. PREPARE THE SUBGRADE FOR THE PLUNGE POOL TO THE REQUIRED LINES AND GRADES. COMPACT ANY FILL REQUIRED IN THE SUBGRADE TO A DENSITY OF APPROXIMATELY THAT OF THE SURROUNDING UNDISTURBED MATERIAL.

4. EMBED THE GEOTEXTILE A MINIMUM OF 4 INCHES AND EXTEND THE GEOTEXTILE A MINIMUM OF 6 INCHES BEYOND THE EDGE OF THE SCOUR HOLE.

5. STONE FOR THE PLUNGE POOL MAY BE PLACED BY EQUIPMENT. CONSTRUCT TO THE FULL COURSE THICKNESS IN ONE OPERATION AND IN SUCH A MANNER AS TO AVOID DISPLACEMENT OF UNDERLYING MATERIALS. DELIVER AND PLACE THE STONE FOR THE PLUNGE POOL IN A MANNER THAT WILL ENSURE THAT IT IS REASONABLY HOMOGENEOUS WITH THE SMALLER STONES AND SPALLS FILLING THE VOIDS BETWEEN THE LARGER STONES. PLACE STONE FOR THE PLUNGE POOL IN A MANNER TO PREVENT DAMAGE TO THE GEOTEXTILE. HAND PLACE TO THE EXTENT NECESSARY.

6. AT THE PLUNGE POOL OUTLET, PLACE THE STONE SO THAT IT MEETS THE EXISTING GRADE.

7. MAINTAIN LINE, GRADE, AND CROSS SECTION. KEEP OUTLET FREE OF EROSION. REMOVE ACCUMULATED SEDIMENT AND DEBRIS. AFTER HIGH FLOWS INSPECT FOR SCOUR AND DISLODGED RIPRAP. MAKE NECESSARY REPAIRS IMMEDIATELY.

SECTION E – FILTERING

E-1 STANDARDS AND SPECIFICATIONS

FOR

SILT FENCE

Definition

A temporary barrier of woven geotextile used to intercept, retain, and filter surface runoff from disturbed areas.

Purpose

To intercept sediment-laden sheet flow runoff allowing the deposition of sediment transported from upslope. Silt fence is not to be used as a velocity check in swales or placed where it will intercept concentrated flow.

Conditions Where Practice Applies

Silt fence is limited to intercepting sheet flow runoff from small disturbed areas. The use of silt fence is based on slope length and steepness of the contributing drainage area.

Design Criteria

Table E.1: Silt Fence Design Constraints

Average Slope Steepness	Maximum Slope Length	Maximum Silt Fence Length
Flatter than 50:1 (<2%)	300 feet*	Unlimited
50:1 to 10:1 (2-10 %)	125 feet	1,000 feet
<10:1 to 5:1 (>10-20%)	100 feet	750 feet
<5:1 (>20%)	40 feet	250 feet

* Maximum slope length is unlimited on Hydrologic Soil Group (HSG) "A" soils.

1. The use of silt fence must conform to the design constraints listed in Table E.1 above.
2. The area downgrade of the silt fence must be undisturbed ground.
3. Silt fence is to be placed on the contour.
4. Silt fence should be used with caution in areas where rocky soils may prevent trenching.
5. Extend both ends of the silt fence a minimum five (5) feet horizontally upslope at 45 degrees to the main fence alignment to prevent runoff from going around the ends of the silt fence.

Maintenance

Accumulated sediment and debris must be removed when bulges develop in the silt fence or when sediment reaches 25 percent of the fence height. The geotextile must be replaced if torn. If undermining occurs, reinstall fence.

DETAIL E-1 SILT FENCE

STANDARD SYMBOL

SF

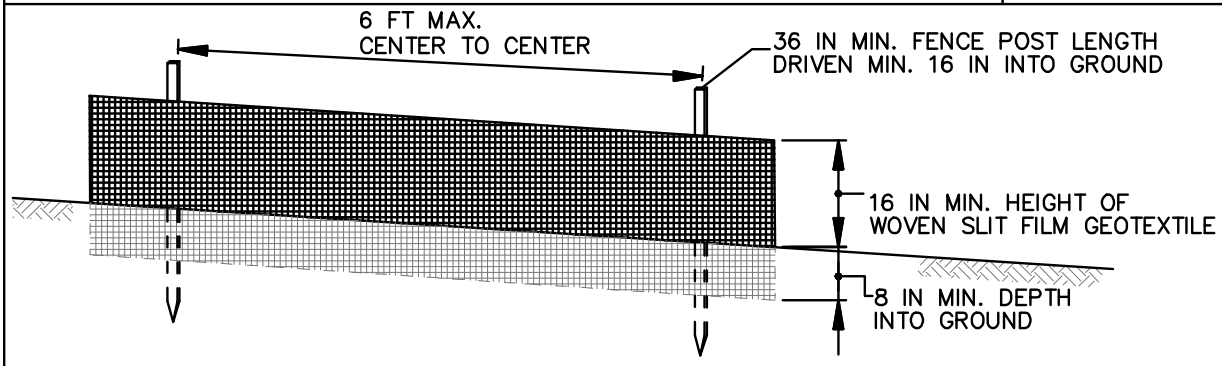

ELEVATION

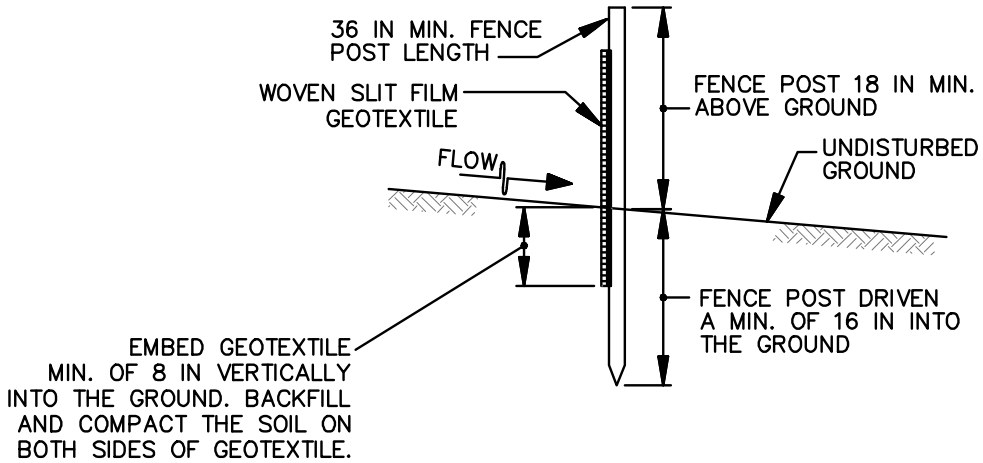

CROSS SECTION

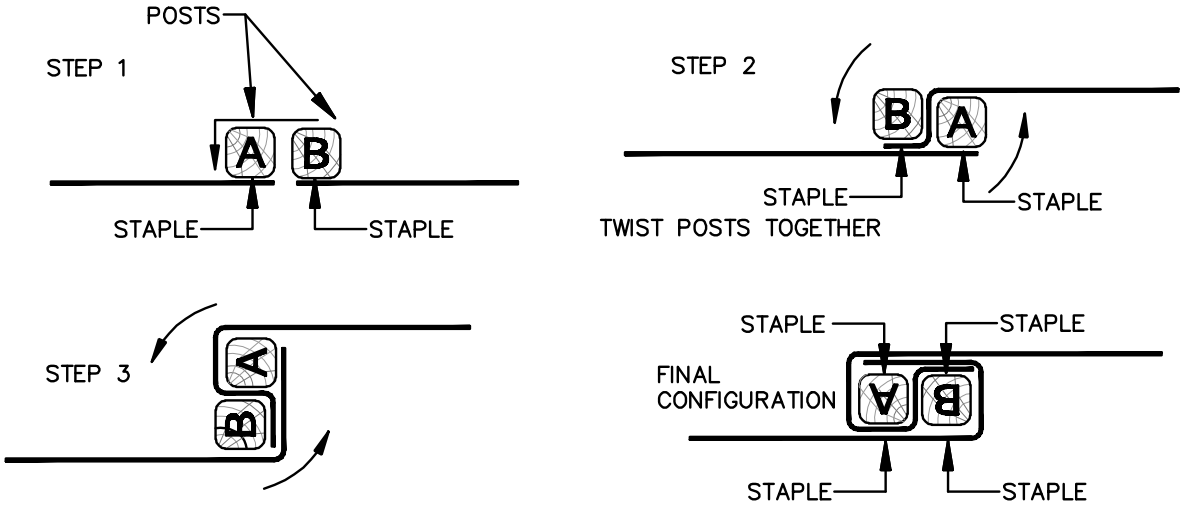

JOINING TWO ADJACENT SILT FENCE SECTIONS (TOP VIEW)

1 OF 2

MARYLAND STANDARDS AND SPECIFICATIONS FOR SOIL EROSION AND SEDIMENT CONTROL

U.S. DEPARTMENT OF AGRICULTURE NATURAL RESOURCES CONSERVATION SERVICE	2011	MARYLAND DEPARTMENT OF ENVIRONMENT WATER MANAGEMENT ADMINISTRATION

DETAIL E-1 SILT FENCE

STANDARD SYMBOL

SF

CONSTRUCTION SPECIFICATIONS

1. USE WOOD POSTS 1¾ X 1¾ ± 1/16 INCH (MINIMUM) SQUARE CUT OF SOUND QUALITY HARDWOOD. AS AN ALTERNATIVE TO WOODEN POST USE STANDARD "T" OR "U" SECTION STEEL POSTS WEIGHING NOT LESS THAN 1 POUND PER LINEAR FOOT.
2. USE 36 INCH MINIMUM POSTS DRIVEN 16 INCH MINIMUM INTO GROUND NO MORE THAN 6 FEET APART.
3. USE WOVEN SLIT FILM GEOTEXTILE AS SPECIFIED IN SECTION H–1 MATERIALS AND FASTEN GEOTEXTILE SECURELY TO UPSLOPE SIDE OF FENCE POSTS WITH WIRE TIES OR STAPLES AT TOP AND MID–SECTION.
4. PROVIDE MANUFACTURER CERTIFICATION TO THE AUTHORIZED REPRESENTATIVE OF THE INSPECTION/ENFORCEMENT AUTHORITY SHOWING THAT THE GEOTEXTILE USED MEETS THE REQUIREMENTS IN SECTION H–1 MATERIALS.
5. EMBED GEOTEXTILE A MINIMUM OF 8 INCHES VERTICALLY INTO THE GROUND. BACKFILL AND COMPACT THE SOIL ON BOTH SIDES OF FABRIC.
6. WHERE TWO SECTIONS OF GEOTEXTILE ADJOIN: OVERLAP, TWIST, AND STAPLE TO POST IN ACCORDANCE WITH THIS DETAIL.
7. EXTEND BOTH ENDS OF THE SILT FENCE A MINIMUM OF FIVE HORIZONTAL FEET UPSLOPE AT 45 DEGREES TO THE MAIN FENCE ALIGNMENT TO PREVENT RUNOFF FROM GOING AROUND THE ENDS OF THE SILT FENCE.
8. REMOVE ACCUMULATED SEDIMENT AND DEBRIS WHEN BULGES DEVELOP IN SILT FENCE OR WHEN SEDIMENT REACHES 25% OF FENCE HEIGHT. REPLACE GEOTEXTILE IF TORN. IF UNDERMINING OCCURS, REINSTALL FENCE.

E-2 STANDARDS AND SPECIFICATIONS

FOR

SILT FENCE ON PAVEMENT

Definition

A temporary barrier of woven geotextile used to intercept, retain, and filter surface runoff from disturbed areas.

Purpose

To intercept sediment-laden sheet flow runoff allowing the deposition of sediment transported from upslope. Silt fence is not to be used where it will intercept concentrated flow.

Conditions Where Practice Applies

Silt fence on pavement is limited to intercepting sheet flow runoff from small disturbed areas when standard silt fence cannot be used. The use of silt fence on pavement is based on the slope length and steepness of the contributing drainage area.

Design Criteria

Table E.2: Silt Fence on Pavement Design Constraints

Average Slope Steepness	Maximum Slope Length	Maximum Silt Fence Length
Flatter than 50:1 (<2%)	250 feet	500 feet
50:1 to 10:1 (2-10%)	125 feet	250 feet
<10:1 to 5:1 (>10-20%)	100 feet	200 feet

1. Silt fence on pavement must be placed on the contour.

2. The use of silt fence on pavement must conform to the design constraints listed in Table E.2 above.

Maintenance

Accumulated sediment and debris must be removed when bulges develop in the silt fence or when sediment reaches 25 percent of the fence height. The geotextile must be replaced if torn. The water tight seal along the bottom must be maintained and the stone replaced if displaced.

DETAIL E-2 SILT FENCE ON PAVEMENT

STANDARD SYMBOL

SFOP

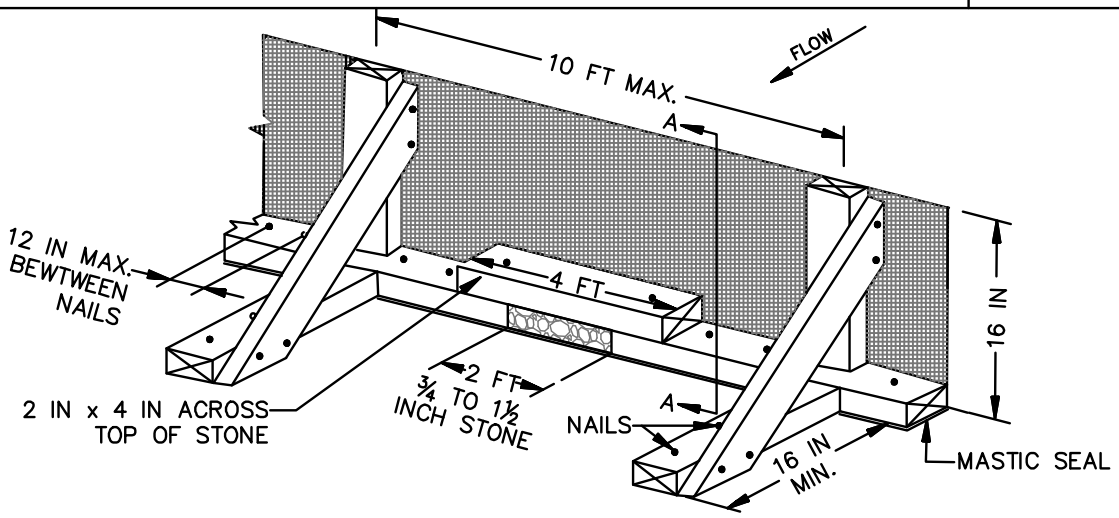

ISOMETRIC VIEW

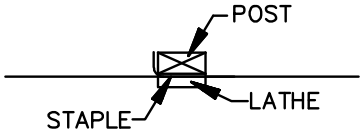

JOINING ADJACENT SECTIONS OF GEOTEXTILE

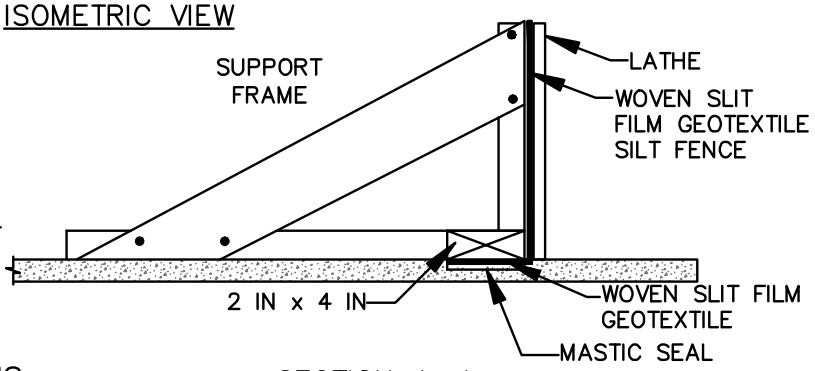

SECTION A–A

CONSTRUCTION SPECIFICATIONS

1. USE NOMINAL 2 INCH X 4 INCH LUMBER.
2. USE WOVEN SLIT FILM GEOTEXTILE, AS SPECIFIED IN SECTION H–1 MATERIALS.
3. PROVIDE MANUFACTURER CERTIFICATION TO THE AUTHORIZED REPRESENTATIVE OF THE INSPECTION/ENFORCEMENT AUTHORITY SHOWING THAT THE GEOTEXTILE USED MEETS THE REQUIREMENTS IN SECTION H–1 MATERIALS.
4. SPACE UPRIGHT SUPPORTS NO MORE THAN 10 FEET APART.
5. PROVIDE A TWO FOOT OPENING BETWEEN EVERY SET OF SUPPORTS AND PLACE STONE IN THE OPENING OVER GEOTEXTILE.
6. KEEP SILT FENCE TAUT AND SECURELY STAPLE TO THE UPSLOPE SIDE OF UPRIGHT SUPPORTS. EXTEND GEOTEXTILE UNDER 2x4.
7. WHERE TWO SECTIONS OF GEOTEXTILE ADJOIN: OVERLAP, FOLD, AND STAPLE TO POST IN ACCORDANCE WITH THIS DETAIL. ATTACH LATHE.
8. PROVIDE A MASTIC SEAL BETWEEN PAVEMENT, GEOTEXTILE, AND 2x4 TO PREVENT SEDIMENT–LADEN WATER FROM ESCAPING BENEATH SILT FENCE INSTALLATION.
9. SECURE BOARDS TO PAVEMENT WITH 40D 5 INCH MINIMUM LENGTH NAILS.
10. REMOVE ACCUMULATED SEDIMENT AND DEBRIS WHEN BULGES DEVELOP IN SILT FENCE OR WHEN SEDIMENT REACHES 25% OF FENCE HEIGHT. REPLACE GEOTEXTILE IF TORN. MAINTAIN WATER TIGHT SEAL ALONG BOTTOM. REPLACE STONE IF DISPLACED.

E-3 STANDARDS AND SPECIFICATIONS

FOR

SUPER SILT FENCE

Definition

A temporary barrier of woven geotextile over chain link fence used to intercept, retain, and filter sediment-laden runoff from disturbed areas.

Purpose

To intercept sediment-laden sheet flow runoff allowing the deposition of sediment transported from upslope. Super silt fence must not be used as a velocity check in swales or placed where it will intercept concentrated flow.

Conditions Where Practice Applies

Where the slope steepness or slope length criterion for silt fence cannot be met or where additional protection is warranted such as adjacent to wetlands, streams, or other sensitive areas. The use of super silt fence is based on the slope length and steepness of the contributing drainage area.

Design Criteria

Table E.3: Super Silt Fence Design Constraints

Average Slope Steepness	Maximum Slope Length	Maximum Super Silt Fence Length
Flatter than 10:1 (0 - <10%)	Unlimited	Unlimited
10:1 to 5:1 (10 - 20%)	200 feet	1,500 feet
<5:1 to 3:1 (>20 - 33%)	150 feet	1,000 feet
<3:1 to 2:1 (>33 - 50%)	100 feet	500 feet
Steeper than 2:1 (>50%)	50 feet	250 feet

1. Super silt fence should be placed on the contour. No section of super silt fence is to exceed a grade of 5% for a distance of more than 50 feet.

2. Super silt fence should be used with caution in areas where rocky soils may prevent trenching.

3. The use of super silt fence must conform to the design constraints listed in Table E.3 above.

4. Extend both ends of the silt fence a minimum five (5) feet horizontally upslope at 45 degrees to the main fence alignment to prevent runoff from going around the ends of the silt fence.

Maintenance

Accumulated sediment and debris must be removed when bulges develop in the fence or when sediment reaches 25 percent of the fence height. The geotextile must be replaced if torn. If undermining occurs, reinstall chain link fencing and geotextile.

DETAIL E-3 SUPER SILT FENCE

STANDARD SYMBOL

SSF

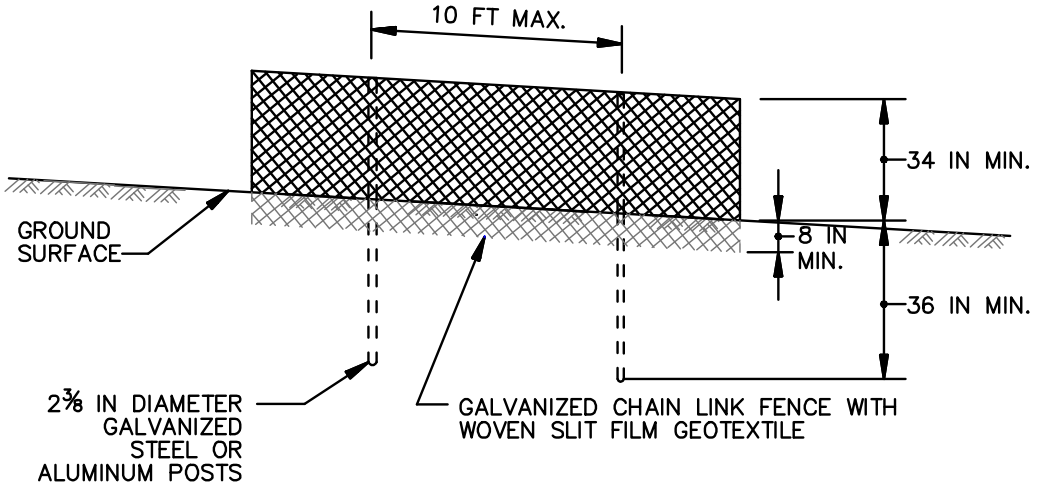

ELEVATION

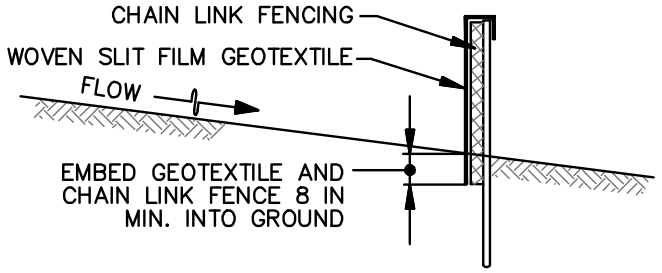

CROSS SECTION

CONSTRUCTION SPECIFICATIONS

1. INSTALL 2⅜ INCH DIAMETER GALVANIZED STEEL POSTS OF 0.095 INCH WALL THICKNESS AND SIX FOOT LENGTH SPACED NO FURTHER THAN 10 FEET APART. DRIVE THE POSTS A MINIMUM OF 36 INCHES INTO THE GROUND.
2. FASTEN 9 GAUGE OR HEAVIER GALVANIZED CHAIN LINK FENCE (2⅜ INCH MAXIMUM OPENING) 42 INCHES IN HEIGHT SECURELY TO THE FENCE POSTS WITH WIRE TIES OR HUG RINGS.
3. FASTEN WOVEN SLIT FILM GEOTEXTILE AS SPECIFIED IN SECTION H–1 MATERIALS, SECURELY TO THE UPSLOPE SIDE OF CHAIN LINK FENCE WITH TIES SPACED EVERY 24 INCHES AT THE TOP AND MID SECTION. EMBED GEOTEXTILE AND CHAIN LINK FENCE A MINIMUM OF 8 INCHES INTO THE GROUND.
4. WHERE ENDS OF THE GEOTEXTILE COME TOGETHER, THE ENDS SHALL BE OVERLAPPED BY 6 INCHES, FOLDED, AND STAPLED TO PREVENT SEDIMENT BY PASS.
5. EXTEND BOTH ENDS OF THE SUPER SILT FENCE A MINIMUM OF FIVE HORIZONTAL FEET UPSLOPE AT 45 DEGREES TO THE MAIN FENCE ALIGNMENT TO PREVENT RUNOFF FROM GOING AROUND THE ENDS OF THE SUPER SILT FENCE.
6. PROVIDE MANUFACTURER CERTIFICATION TO THE INSPECTION/ENFORCEMENT AUTHORITY SHOWING THAT GEOTEXTILE USED MEETS THE REQUIREMENTS IN SECTION H–1 MATERIALS.
7. REMOVE ACCUMULATED SEDIMENT AND DEBRIS WHEN BULGES DEVELOP IN FENCE OR WHEN SEDIMENT REACHES 25% OF FENCE HEIGHT. REPLACE GEOTEXTILE IF TORN. IF UNDERMINING OCCURS, REINSTALL CHAIN LINK FENCING AND GEOTEXTILE.

E-4 STANDARDS AND SPECIFICATIONS

FOR

CLEAR WATER PIPE THROUGH SILT FENCE OR SUPER SILT FENCE

Definition

A pipe extension through silt fence or super silt fence. Use of flexible piping is preferred.

Purpose

To provide a mechanism to extend a clear water pipe through silt fence or super silt fence.

Conditions Where Practice Applies

A clear water pipe through silt fence or super silt fence is used when a pipe intersects silt fence or super silt fence.

Design Criteria

1. The pipe and silt fence or super silt fence must conform to the design criteria for the respective practices. The maximum pipe diameter through silt fence is 12 inches and through super silt fence is 24 inches.

2. The plywood baffle is to be placed parallel to the contour.

3. The pipe must outlet onto a stable area at a non-erosive rate.

Maintenance

Accumulated sediment and debris must be removed when sediment reaches 6 inches in height. The geotextile must be replaced if torn. If undermining occurs, reinstall baffle, chain link, and geotextile. The stone must be replaced if displaced. The point of discharge must be kept free of erosion.

DETAIL E-4 CLEAR WATER PIPE THROUGH SILT FENCE OR SUPER SILT FENCE

STANDARD SYMBOL

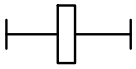

CWP

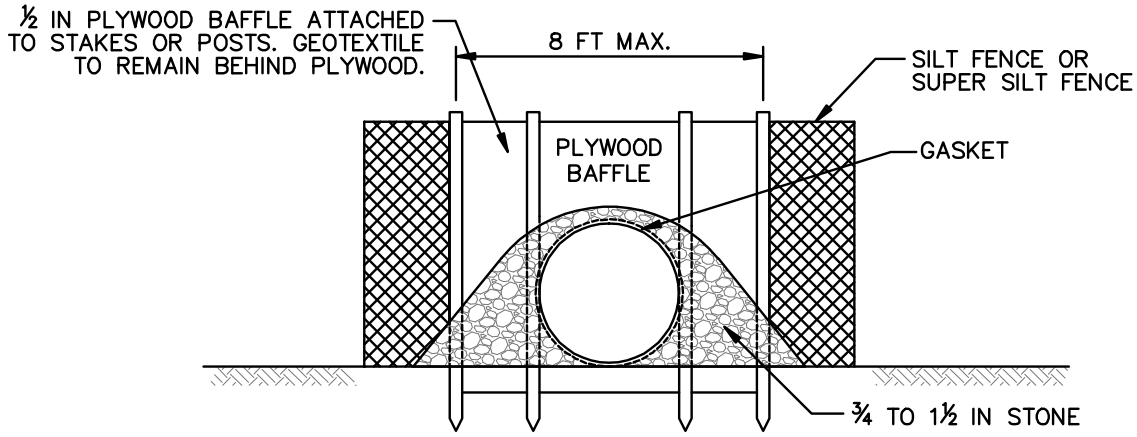

CROSS SECTION – LOOKING DOWNGRADE

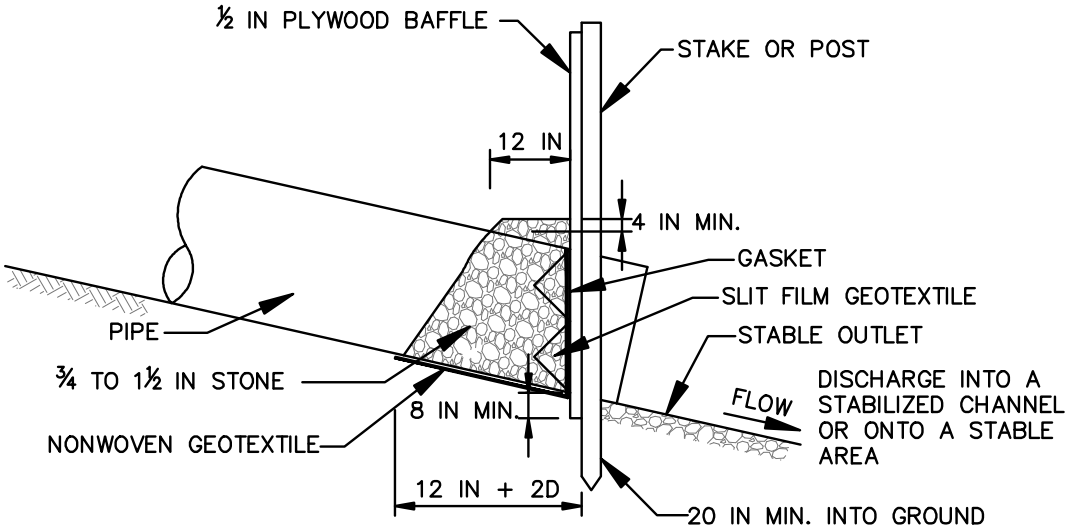

PROFILE

CONSTRUCTION SPECIFICATIONS

1. INSTALL SILT FENCE OR SUPER SILT FENCE IN ACCORDANCE WITH DETAIL E–1 OR DETAIL E–2.
2. AT THE PIPE LOCATION, CUT AND PULL BACK THE WOVEN SLIT FILM GEOTEXTILE AND CHAIN LINK FENCING. SECURE GEOTEXTILE TO PIPE WITH GASKET. INSTALL ADDITIONAL STAKES OR POSTS IF NECESSARY TO ACCOMMODATE THE INSTALLATION OF THE BAFFLE BOARD.
3. ENTRENCH ½ INCH PLYWOOD BAFFLE A MINIMUM OF 8 INCHES AND SECURE TO THE UPGRADE SIDE OF THE FENCE STAKES OR POSTS. BAFFLE SHOULD BE AT LEAST THE HEIGHT OF THE FENCE.
4. PLACE ¾ TO 1½ INCH STONE OR EQUIVALENT RECYCLED CONCRETE BEHIND THE PLYWOOD BAFFLE ON NONWOVEN GEOTEXTILE AND EXTEND 12 INCH MIN. ALONG TOP OF PIPE AND TO A HEIGHT OF 4 INCHES ABOVE THE TOP OF PIPE.
5. USE NONWOVEN AND WOVEN SLIT FILM GEOTEXTILES AS SPECIFIED IN SECTION H–1 MATERIALS.
6. REMOVE ACCUMULATED SEDIMENT AND DEBRIS WHEN SEDIMENT REACHES 6 INCHES IN HEIGHT. REPLACE GEOTEXTILE IF TORN. IF UNDERMINING OCCURS, REINSTALL BAFFLE, CHAIN LINK, AND GEOTEXTILE. REPLACE STONE IF DISPLACED. KEEP POINT OF DISCHARGE FREE OF EROSION.

E-5 STANDARDS AND SPECIFICATIONS

FOR

FILTER BERM

Definition

A temporary berm of compacted wood chips or wood chips and compost.

Purpose

To filter sediment-laden runoff and maintain sheet flow.

Conditions Where Practice Applies

Where penetration of the ground is not desirable, such as where archeological artifacts or contaminated material may be encountered.

Design Criteria

Table E.4: Filter Berm Design Constraints

Average Slope Steepness	Maximum Contributing Slope Length (ft)		Length of Berm (ft)
	Berm A	**Berm B**	
Flatter than 50:1 (2%)	500	1000	Unlimited
<50:1 to 10:1 (>2 – 10%)	250	500	1000
<10:1 to 5:1 (>10 – 20%)	100	200	500
<5:1 to < 2:1 (>20 – 50%)	25	50	500

Table E.5: Filter Berm Design Criteria

	BERM A	**BERM B**
Berm Height (a)	30 in.	42 in.
Berm Top Width (b)	36 in.	48 in.
Side Slopes	2:1 or flatter	2:1 or flatter

1. Filter berms are to be placed on the contour to intercept and discharge runoff in a sheet flow condition. They are not a substitute for earth dikes.

2. No section of a filter berm is to exceed a grade of 5% for a distance of more than 50 feet.

3. A filter berm must conform to the design constraints in Table E.4.

4. The berm may contain up to 50% compost material in accordance with Table H.4.

Maintenance

The line, grade, and cross section must be maintained. This may require adding wood chips or making other repairs as conditions demand to maintain the specified dimensions. Accumulated sediment and debris must be removed when they reach 25 percent of the berm height.

DETAIL E-5 FILTER BERM

STANDARD SYMBOL
FB–A
FB–B

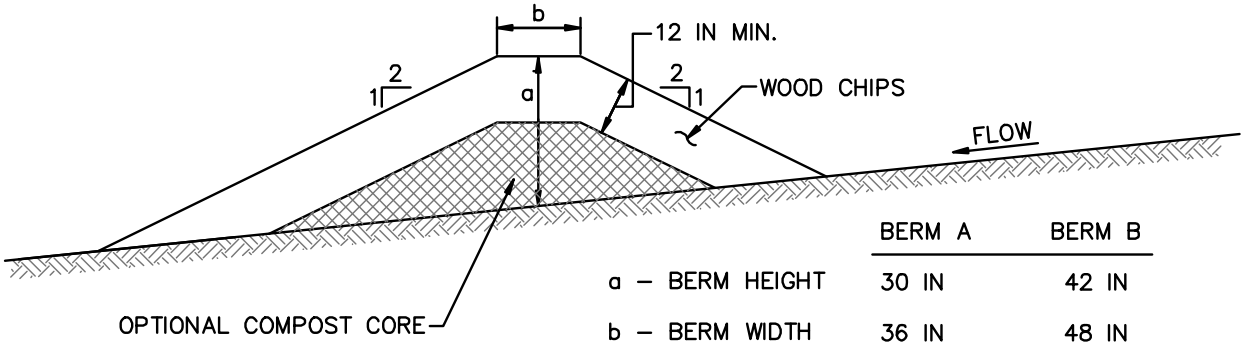

	BERM A	BERM B
a – BERM HEIGHT	30 IN	42 IN
b – BERM WIDTH	36 IN	48 IN

CROSS SECTION

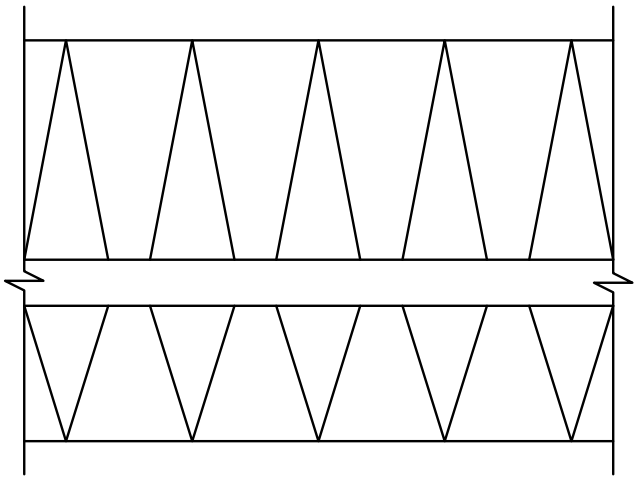

PLAN VIEW

CONSTRUCTION SPECIFICATIONS

1. PLACE BERM ON THE CONTOUR WITH ENDS TURNED UPGRADE TO PREVENT BYPASS. DO NOT EXCEED GRADES OF 5 PERCENT ALONG THE BERM FOR A DISTANCE GREATER THAN 50 FEET.
2. CONSTRUCT BERM OF CLEAN WOOD CHIPS A MINIMUM SIZE OF 1X2 INCH AND A MAXIMUM OF 3X3 INCH.
3. COMPACT AND SHAPE MATERIAL TO CONFORM TO DIMENSIONS SPECIFIED ON THE APPROVED PLAN.
4. DO NOT PLACE UN–CHIPPED TREE PIECES, BRUSH, OR STUMPS IN THE BERM. BERM MUST BE FREE OF BANK PROJECTIONS OR OTHER IRREGULARITIES.
5. THE BERM MAY CONTAIN UP TO 50% COMPOST MATERIAL IN ACCORDANCE WITH SECTION H–1 MATERIALS.
6. MAINTAIN LINE, GRADE, AND CROSS SECTION. ADD WOOD CHIPS OR MAKE OTHER REPAIRS AS CONDITIONS DEMAND TO MAINTAIN SPECIFIED DIMENSIONS. REMOVE ACCUMULATED SEDIMENT AND DEBRIS WHEN THEY REACH 25% OF BERM HEIGHT.

E-6 STANDARDS AND SPECIFICATIONS

FOR

FILTER LOG

Definition

A temporary, tubular casing filled with compost filter media.

Purpose

To intercept sheet flow, retain sediment, and filter runoff through the log media.

Conditions Where Practice Applies

Filter logs are an alternative to silt fence and can be used in hard to reach areas, on frozen ground and pavement, and near tree roots.

Note: fiber rolls are not interchangeable with filter logs. Although similar in appearance, fiber rolls are filled with rice or wheat straw, flax, coconut fiber, or wood excelsior, and are used when stabilizing and revegetating slopes because they slow and spread overland flow, thereby minimizing erosion, rills, and gullies.

Design Criteria

Table E.6: Filter Log Design Constraints

Log Diameter	**8 to 15 inches**	**>15 to 24 inches**
Average Slope	**Maximum Slope Length (ft)**	
Flatter than 50:1 (<2%)	125	250
50:1 to 10:1 (2 – 10%)	65	125
<10:1 to 5:1 (>10 – 20%)	50	100
<5:1 to 2:1 (>20 – 50%)	N/A	50

1. Filter logs must be placed on the contour with the ends turned upgrade to prevent bypass.

2. Filter logs can only be used with sheet flow.

3. Filter logs must be used in accordance with the design constraints in Table E.6.

4. The filter media must be compost in accordance with Table H.3 or other approved biodegradable materials.

5. Filter logs must either be staked every 4 feet maximum, or trenched a minimum of 4 inches into the ground and staked every 8 feet maximum.

Maintenance

Sediment and debris must be removed and mulch replaced when sediment has accumulated to a depth of one half the exposed height of the log. The filter log must be replaced if clogged or torn. The filter log needs to be reinstalled if undermined or dislodged. For permanent applications, vegetation must be established and maintained so that the requirements for Adequate Vegetative Establishment are met in accordance with Section B-4 Vegetative Stabilization.

DETAIL E-6 FILTER LOG

STANDARD SYMBOL
FL–18

DESIGNATION FL–18 REFERS TO 18 INCH DIAMETER FILTER LOG.

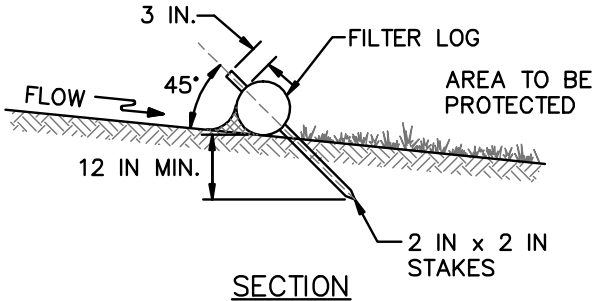

SECTION

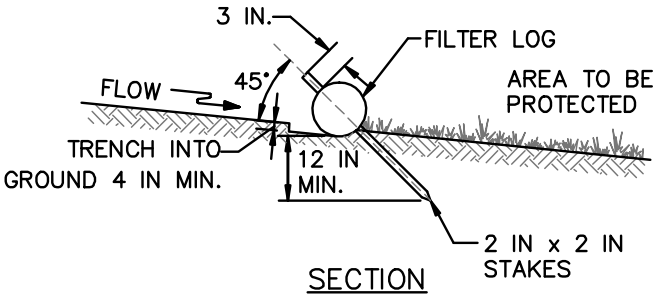

SECTION

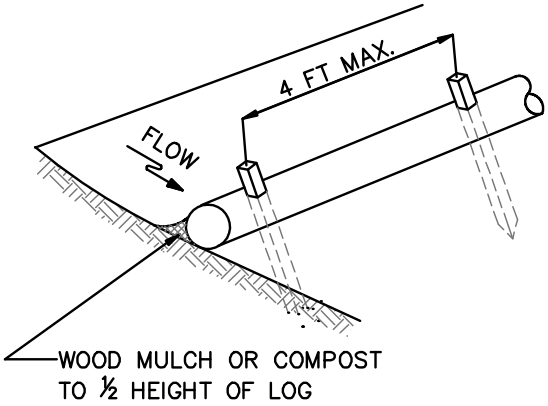

UNTRENCHED INSTALLATION

OR

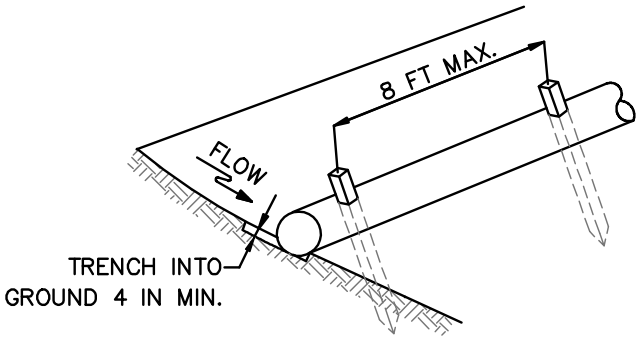

ENTRENCHED INSTALLATION*

*THIS APPLICATION MAY NOT BE USED WITH LOGS SMALLER THAN 12 IN.

ISOMETRIC VIEW

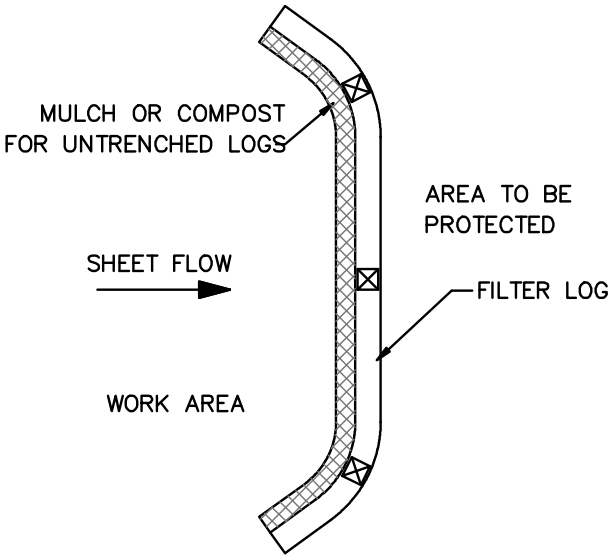

PLAN

1 OF 2

MARYLAND STANDARDS AND SPECIFICATIONS FOR SOIL EROSION AND SEDIMENT CONTROL

U.S. DEPARTMENT OF AGRICULTURE NATURAL RESOURCES CONSERVATION SERVICE	2011	MARYLAND DEPARTMENT OF ENVIRONMENT WATER MANAGEMENT ADMINISTRATION

DETAIL E-6 FILTER LOG

STANDARD SYMBOL

FL–18

DESIGNATION FL–18 REFERS TO 18 INCH DIAMETER FILTER LOG.

CONSTRUCTION SPECIFICATIONS

1. PRIOR TO INSTALLATION, CLEAR ALL OBSTRUCTIONS INCLUDING ROCKS, CLODS, AND DEBRIS GREATER THAN ONE INCH THAT MAY INTERFERE WITH PROPER FUNCTION OF FILTER LOG.
2. FILL LOG NETTING UNIFORMLY WITH COMPOST (IN ACCORDANCE WITH SECTION H–1 MATERIALS), OR OTHER APPROVED BIODEGRADABLE MATERIAL TO DESIRED LENGTH SUCH THAT LOGS DO NOT DEFORM.
3. INSTALL FILTER LOGS PERPENDICULAR TO THE FLOW DIRECTION AND PARALLEL TO THE SLOPE WITH THE BEGINNING AND END OF THE INSTALLATION POINTING SLIGHTLY UP THE SLOPE CREATING A "J" SHAPE AT EACH END TO PREVENT BYPASS.
4. FOR UNTRENCHED INSTALLATION BLOW OR HAND PLACE MULCH OR COMPOST ON UPHILL SIDE OF THE SLOPE ALONG LOG.
5. STAKE FILTER LOG EVERY 4 FEET OR CLOSER ALONG ENTIRE LENGTH OF LOG OR TRENCH LOG INTO GROUND A MINIMUM OF 4 INCHES AND STAKE LOG EVERY 8 FEET OR CLOSER.
6. USE STAKES WITH A MINIMUM NOMINAL CROSS SECTION OF 2X2 INCH AND OF SUFFICIENT LENGTH TO ATTAIN A MINIMUM OF 12 INCHES INTO THE GROUND AND 3 INCHES PROTRUDING ABOVE LOG.
7. WHEN MORE THAN ONE LOG IS NEEDED, OVERLAP ENDS 12 INCHES MINIMUM AND STAKE.
8. REMOVE SEDIMENT WHEN IT HAS ACCUMULATED TO A DEPTH OF ½ THE EXPOSED HEIGHT OF LOG AND REPLACE MULCH. REPLACE FILTER LOG IF TORN. REINSTALL FILTER LOG IF UNDERMINING OR DISLODGING OCCURS. REPLACE CLOGGED FILTER LOGS. FOR PERMANENT APPLICATIONS, ESTABLISH AND CONTINUOUSLY MEET REQUIREMENTS FOR ADEQUATE VEGETATIVE ESTABLISHMENT IN ACCORDANCE WITH SECTION B–4 VEGETATIVE STABILIZATION.

E-7 STANDARDS AND SPECIFICATIONS

FOR

TEMPORARY STONE OUTLET STRUCTURE

Definition

A stone dam constructed with a weir and faced with geotextile.

Purpose

To collect, detain, and filter sediment-laden water as well as provide a protected outlet for small concentrated flows.

Conditions Where Practice Applies

Temporary stone outlet structures are installed at points where flow concentrates, typically in combination with earth dikes, and are used where there is a need to discharge runoff through a protected outlet. The drainage area for this practice is limited to ½ acre. For larger drainage areas, temporary gabion structures are used.

Design Criteria

1. The maximum drainage area to this practice is ½ acre.

2. Provide 1800 cubic feet of storage volume per acre of drainage area (900 cu. ft. maximum) behind the structure.

3. The weir crest must be 6 inches lower than lowest point of connecting dike or other water conveyance practice.

4. Stone outlet structures should not be used in series.

Maintenance

Remove sediment when it has accumulated to within six inches of the weir crest. Replace the geotextile and stone facing when the structure ceases to drain. The line, grade, and cross section must be maintained.

DETAIL E-7 TEMPORARY STONE OUTLET STRUCTURE

STANDARD SYMBOL

TSOS

MAXIMUM DRAINAGE AREA = ½ ACRE

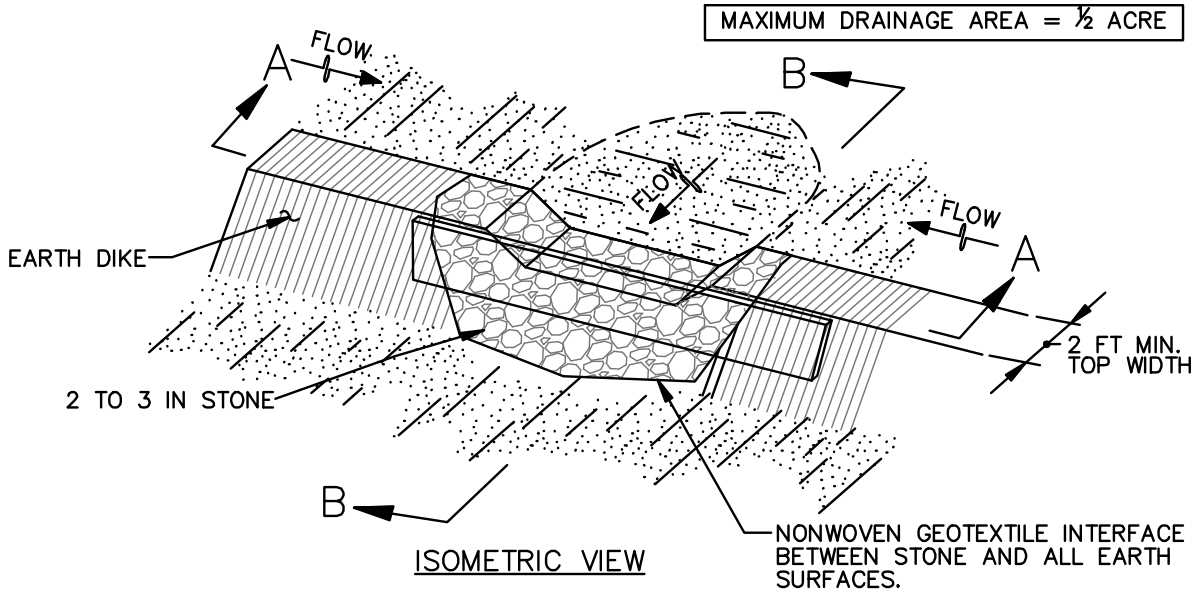

ISOMETRIC VIEW

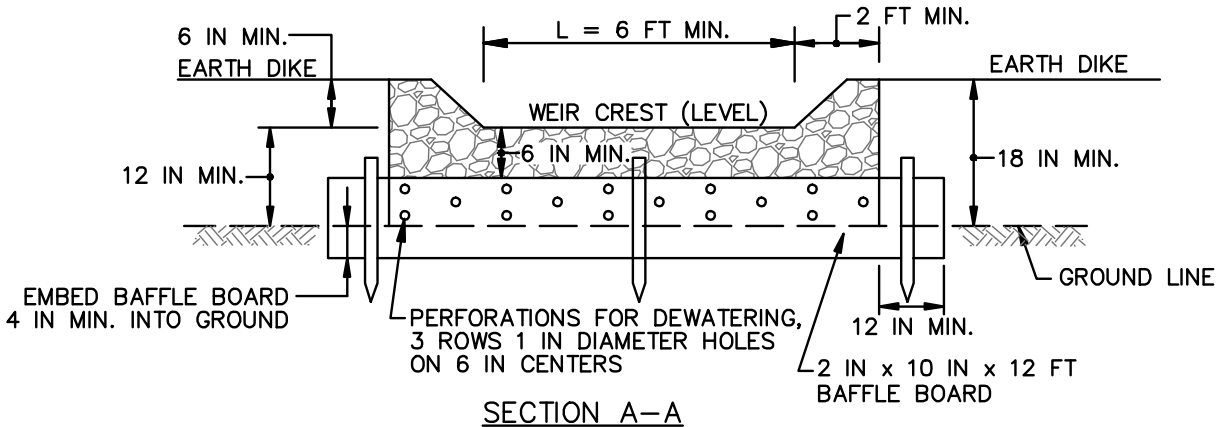

SECTION A–A

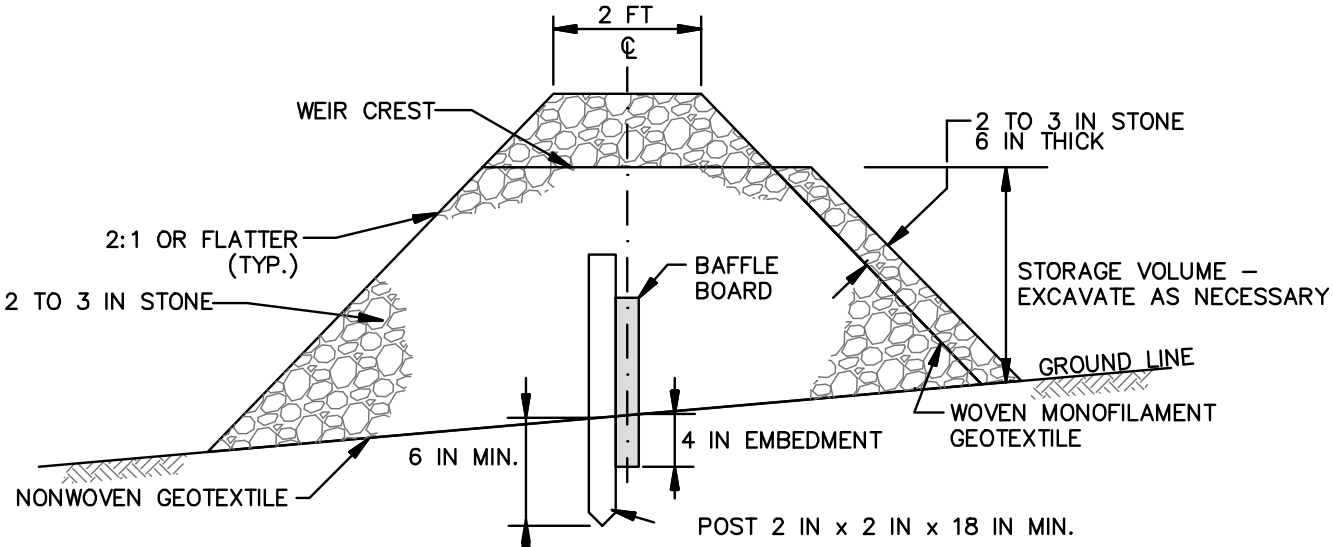

SECTION B–B

1 OF 2

MARYLAND STANDARDS AND SPECIFICATIONS FOR SOIL EROSION AND SEDIMENT CONTROL

U.S. DEPARTMENT OF AGRICULTURE NATURAL RESOURCES CONSERVATION SERVICE	2011	MARYLAND DEPARTMENT OF ENVIRONMENT WATER MANAGEMENT ADMINISTRATION

DETAIL E-7 TEMPORARY STONE OUTLET STRUCTURE

STANDARD SYMBOL

TSOS

CONSTRUCTION SPECIFICATIONS

1. PROVIDE STORAGE VOLUME AS SPECIFIED ON APPROVED PLANS.
2. USE NONWOVEN GEOTEXTILE ON INTERFACE BETWEEN GROUND AND STONE.
3. PERFORATE BAFFLE BOARD WITH 3 ROWS OF 1 INCH DIAMETER HOLES 6 INCHES ON CENTER, EMBED A MINIMUM OF 4 INCHES INTO GROUND, AND EXTEND BAFFEL BOARD MINIMUM OF 12 INCHES INTO EARTH DIKE.
4. USE CLEAN 2 TO 3 INCH STONE OR EQUIVALENT RECYCLED CONCRETE. PLACE WOVEN MONOFILAMENT GEOTEXTILE ON UPSTREAM FACE AND COVER WITH A MINIMUM OF 6 INCHES OF ADDITIONAL STONE.
5. USE NONWOVEN AND WOVEN MONOFILAMENT GEOTEXTILES AS SPECIFIED IN SECTION H–1 MATERIALS.
6. SET WEIR CREST OF STONE 6 INCHES LOWER THAN THE TOP OF EARTH DIKE. USE MINIMUM LENGTH OF 6 FEET FOR WEIR CREST.
7. REMOVE SEDIMENT WHEN IT HAS ACCUMULATED TO WITHIN 6 INCHES OF WEIR CREST. REPLACE GEOTEXTILE AND STONE FACING WHEN STRUCTURE CEASES TO DRAIN. MAINTAIN LINE, GRADE, AND CROSS SECTION.
8. UPON REMOVAL OF STONE OUTLET STRUCTURE, GRADE AREA FLUSH WITH EXISTING GROUND. WITHIN 24 HOURS STABILIZE DISTURBED AREA WITH TOPSOIL, SEED, AND MULCH, OR AS SPECIFIED ON APPROVED PLAN.

E-8 STANDARDS AND SPECIFICATIONS

FOR

TEMPORARY GABION OUTLET STRUCTURE

Definition

A stone dam constructed with a weir and consisting of wire baskets (gabions) filled with rock or recycled concrete equivalent and faced with geotextile and stone.

Purpose

To collect, detain, and filter sediment-laden water as well as provide a protected outlet for concentrated flows.

Conditions Where Practice Applies

Temporary gabion outlet structures are installed in ditches, swales, or other points where flow concentrates, typically in combination with earth dikes, and are used where there is a need to discharge runoff through a protected outlet. A temporary gabion outlet structure is used where the drainage area limit for a temporary stone outlet structure is exceeded. The drainage area for this practice is limited to 1½ acres.

Design Criteria

1. The maximum drainage area to this practice is 1½ acres.

2. Provide 1800 cubic feet of storage volume per acre of drainage area (2700 cu. ft. maximum) behind the structure.

3. Specify the weir crest elevation of the gabion outlet structure on the plan.

4. When a temporary gabion outlet structure is used in conjunction with a standard earth dike, provide a transition dike on each side of the structure. The height of the transition dike must be at least 4 inches above the top of the gabion basket and must extend at zero percent grade until it intercepts the adjoining earth dike.

Maintenance

Remove sediment when it has accumulated to within twelve inches of the weir crest. Replace the geotextile and stone facing when the structure ceases to function. The line, grade, and cross section must be maintained.

DETAIL E-8 TEMPORARY GABION OUTLET STRUCTURE

STANDARD SYMBOL

TGOS

MAXIMUM DRAINAGE AREA = 1½ ACRE

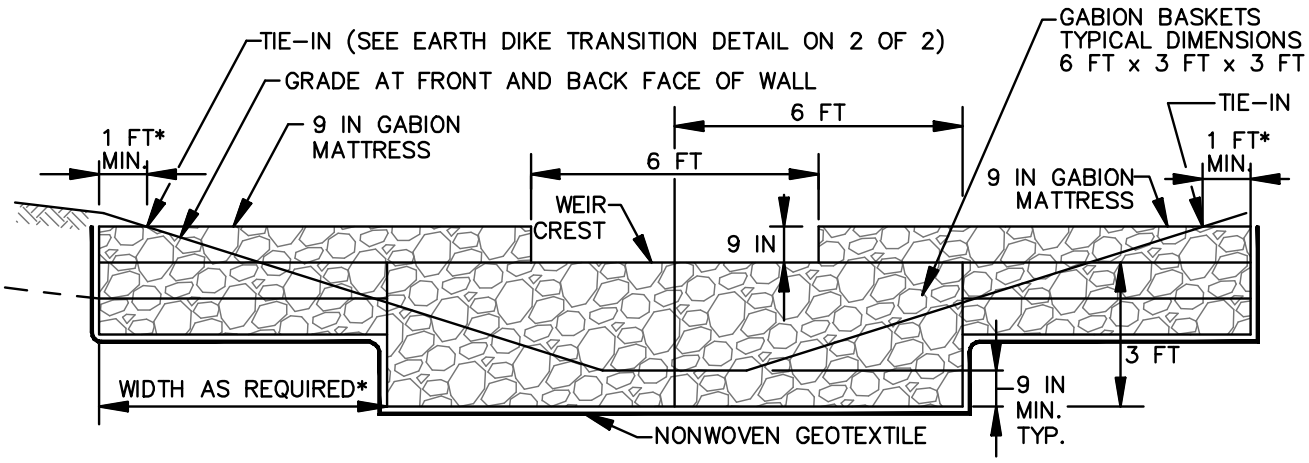

*ONE BASKET OR MULTIPLE MATTRESSES NEED TO EXTEND FROM THE GABION/EARTH INTERSECTION (TIE IN) TO A MINIMUM 1 FOOT BEYOND THE TIE IN.

ELEVATION

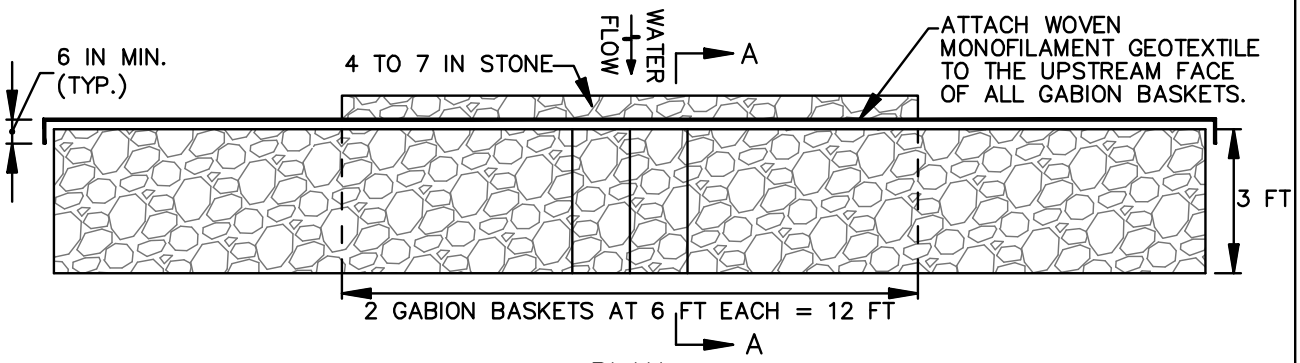

PLAN

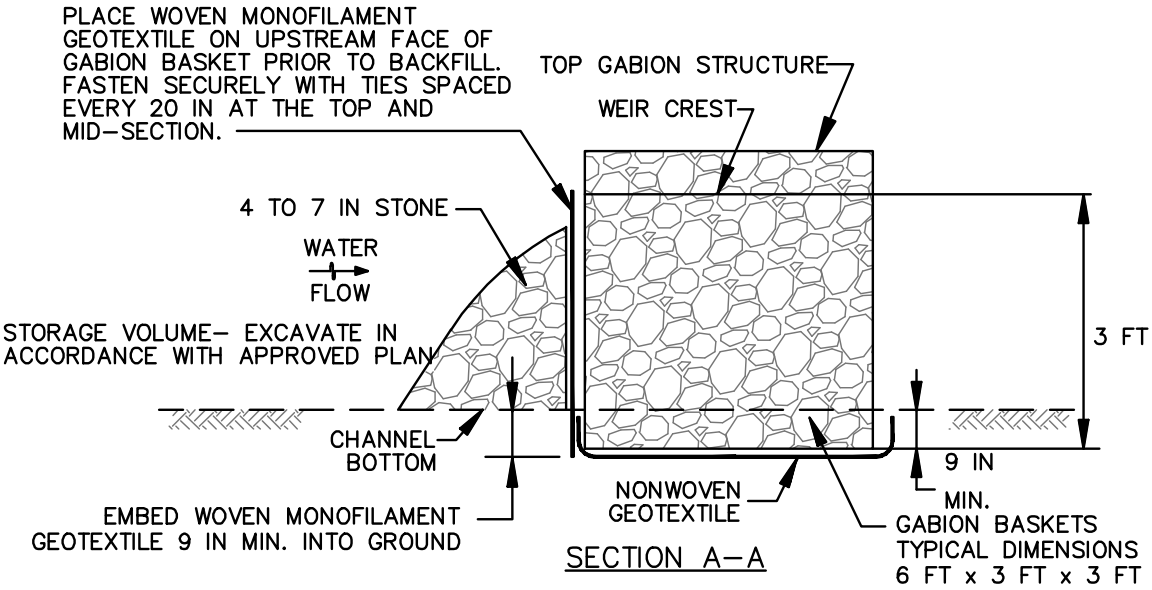

SECTION A–A

1 OF 2

MARYLAND STANDARDS AND SPECIFICATIONS FOR SOIL EROSION AND SEDIMENT CONTROL

U.S. DEPARTMENT OF AGRICULTURE NATURAL RESOURCES CONSERVATION SERVICE	2011	MARYLAND DEPARTMENT OF ENVIRONMENT WATER MANAGEMENT ADMINISTRATION

DETAIL E-8 TEMPORARY GABION OUTLET STRUCTURE

STANDARD SYMBOL

TGOS

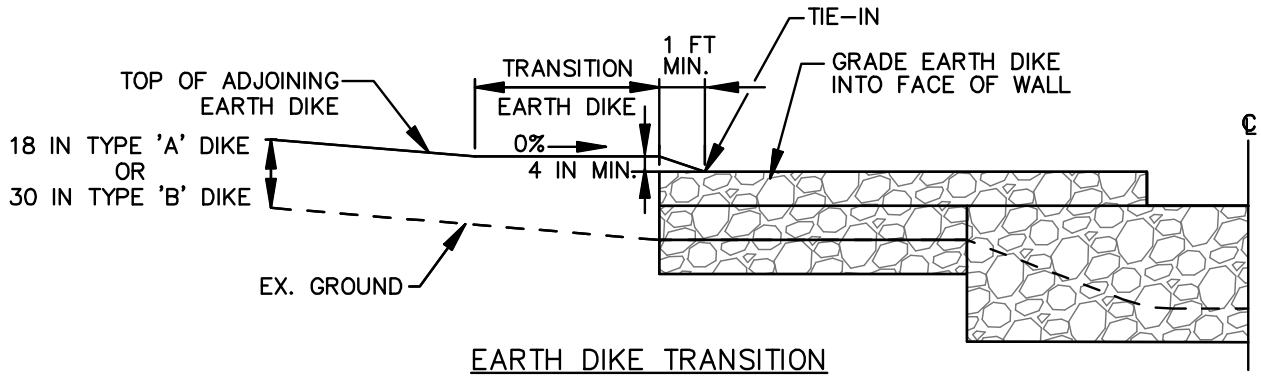

EARTH DIKE TRANSITION

NOTES:

1. PROVIDE TRANSITION LENGTH AND HEIGHT AS SPECIFIED ON PLAN. HEIGHT OF TRANSITION EARTH DIKE MUST EXCEED 4 INCH MINIMUM FREEBOARD ABOVE TOP OF GABION AND EXTEND AT THIS ELEVATION UNTIL IT INTERCEPTS THE TOP OF ADJOINING EARTH DIKE.
2. PROVIDE POSITIVE DRAINAGE ALONG EARTH DIKE TO GABION OUTLET STRUCTURE.
3. COMPACT FILL.
4. SHAPE EARTH DIKE TO LINE, GRADE, AND CROSS SECTION AS SPECIFIED ON PLAN. BANK PROJECTIONS OR IRREGULARITIES ARE NOT ALLOWED.

CONSTRUCTION SPECIFICATIONS

1. PROVIDE STORAGE VOLUME AS SPECIFIED ON APPROVED PLANS.
2. USE BASKETS MADE OF 11 GAUGE WIRE OR HEAVIER.
3. USE NONWOVEN AND WOVEN MONOFILAMENT GEOTEXTILES AS SPECIFIED IN SECTION H–1 MATERIALS.
4. INSTALL GABIONS IN ACCORDANCE WITH MANUFACTURER RECOMMENDATIONS.
5. EMBED THE GABION OUTLET STRUCTURE INTO THE SOIL A MINIMUM OF 9 INCHES. PROVIDE NONWOVEN GEOTEXTILE UNDER ALL GABIONS.
6. FILL GABION BASKETS WITH CLEAN 4 TO 7 INCH STONE OR EQUIVALENT RECYCLED CONCRETE WITHOUT REBAR OR WIRE MESH.
7. MAKE THE WEIR CREST OF THE GABION OUTLET STRUCTURE 9 INCHES LOWER THAN THE TOP OF THE ADJACENT GABIONS.
8. PROVIDE A MINIMUM WEIR CREST OF 6 FEET.
9. ATTACH WOVEN MONOFILAMENT GEOTEXTILE TO THE UPSTREAM FACE OF GABION BASKETS AND COVER WITH 4 TO 7 INCH STONE.
10. REMOVE SEDIMENT WHEN IT HAS ACCUMULATED TO WITHIN 12 INCHES OF THE WEIR CREST. REPLACE GEOTEXTILE AND STONE FACING WHEN STRUCTURE CEASES TO FUNCTION. MAINTAIN LINE, GRADE, AND CROSS SECTION.
11. UPON REMOVAL OF GABION OUTLET STRUCTURE, GRADE AREA FLUSH WITH EXISTING GROUND. WITHIN 24 HOURS STABILIZE DISTURBED AREA WITH TOPSOIL, SEED, AND MULCH, OR AS SPECIFIED ON APPROVED PLAN.

2 OF 2

E-9 STANDARDS AND SPECIFICATIONS

FOR

STORM DRAIN INLET PROTECTION

Definition

A filter consisting of stone and/or nonwoven geotextile constructed around a storm drain inlet.

Purpose

To filter sediment-laden runoff before it enters the storm drain system.

Conditions Where Practices Applies

When sediment-laden flow is directed to an inlet and it is not possible to temporarily divert the storm drain outfall into a sediment trapping practice, or when watertight blocking of inlets is not advisable.

There are multiple types of inlet protection, each intended for use with a particular type of inlet.

Design Criteria

1. Determine drainage area for all inlet locations. Use Table E.7 for drainage area constraints.

2. Provisions (e.g., asphalt berm, earth dike, etc.) should be made to prevent flow bypass for inlets on slopes. Otherwise, bypassed flow must be addressed by a down slope sediment control practice. If the maximum drainage area to an inlet is exceeded (see Table E-7), the inlet needs to be protected or blocked and additional controls installed.

Table E.7: Inlet Protection Drainage Area Limits

Type of Inlet Protection	Maximum Drainage Area
Standard Inlet Protection	A - ¼ acre B - 1 acre
At –Grade Inlet Protection	1 acre
Curb Inlet Protection (CIP)	¼ acre
Median Inlet Protection	1 acre
Median Sump Inlet	1 acre/side
Combination Inlet Protection	¼ acre
Gabion Inlet Protection	1½ acres

Maintenance

Storm drain inlet protection requires frequent maintenance. To maintain function and avoid premature clogging, accumulated sediment needs to be removed after each rain event. If the inlet protection does not completely drain within 24 hours after a storm event, it is clogged. When this occurs, remove accumulated sediment and clean, or replace the geotextile and stone.

DETAIL E-9-1 STANDARD INLET PROTECTION

STANDARD SYMBOL

SIP

TYPE A MAXIMUM DRAINAGE AREA = ¼ ACRE
TYPE B MAXIMUM DRAINAGE AREA = 1 ACRE

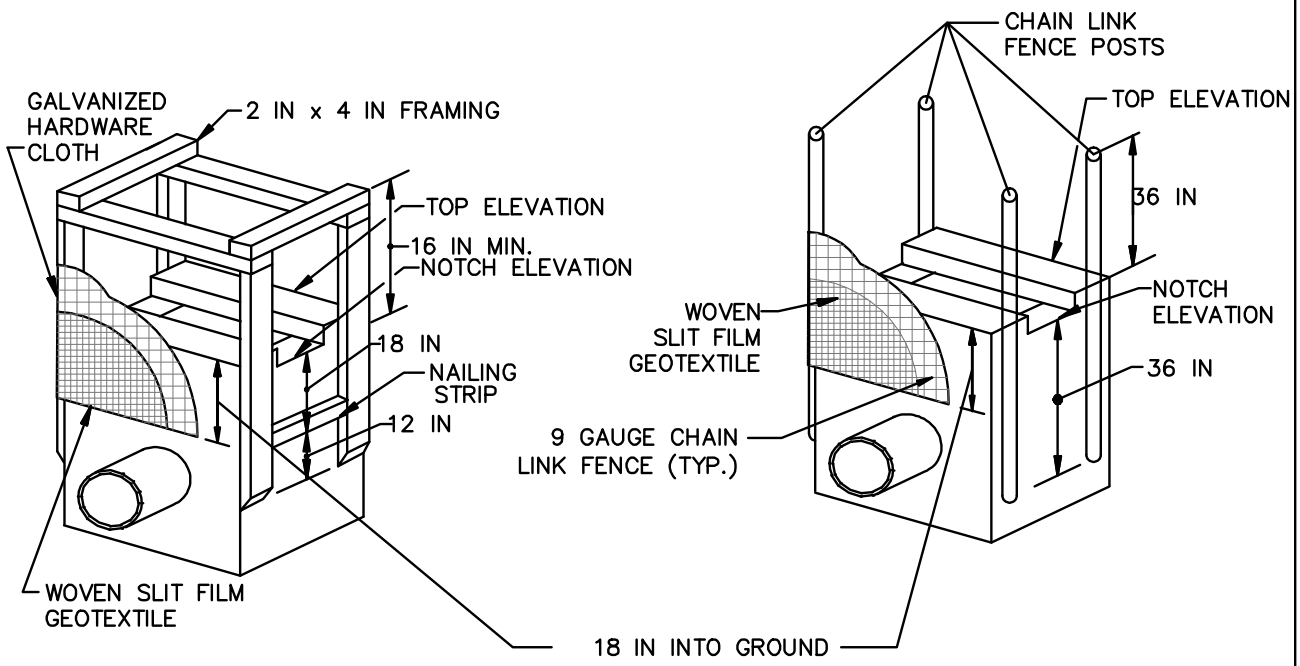

TYPE A

TYPE B

ISOMETRIC VIEW

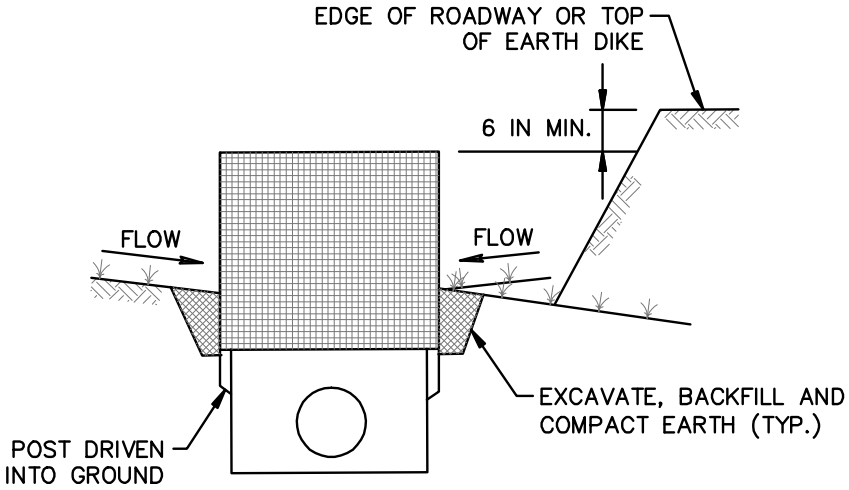

SECTION FOR TYPE A AND B

DETAIL E-9-1 STANDARD INLET PROTECTION

STANDARD SYMBOL

SIP

CONSTRUCTION SPECIFICATIONS

1. USE WOVEN SLIT FILM GEOTEXTILE AS SPECIFIED IN SECTION H–1 MATERIALS.

2. EXCAVATE COMPLETELY AROUND THE INLET TO A DEPTH OF 18 INCHES BELOW THE NOTCH ELEVATION.

3. FOR TYPE A, USE NOMINAL 2 INCH X 4 INCH CONSTRUCTION GRADE LUMBER POSTS, DRIVEN 1 FOOT INTO THE GROUND AT EACH CORNER OF THE INLET. PLACE NAIL STRIPS BETWEEN THE POSTS ON THE ENDS OF THE INLET. ASSEMBLE THE TOP PORTION OF THE 2X4 FRAME AS SHOWN. STRETCH ½ INCH GALVANIZED HARDWARE CLOTH TIGHTLY AROUND THE FRAME AND FASTEN SECURELY. FASTEN GEOTEXTILE SECURELY TO THE HARDWARE CLOTH WITH TIES SPACED EVERY 24 INCHES AT THE TOP AND MID SECTION. EMBED GEOTEXTILE AND HARDWARE CLOTH A MINIMUM OF 18 INCHES BELOW THE WEIR CREST. THE ENDS OF THE GEOTEXTILE MUST MEET AT A POST, BE OVERLAPPED AND FOLDED, THEN FASTENED TO THE POST.

   FOR TYPE B, USE 2⅜ INCH DIAMETER GALVANIZED STEEL POSTS OF 0.095 INCH WALL THICKNESS AND 6 FOOT LENGTH, DRIVEN A MINIMUM OF 36 INCHES BELOW THE WEIR CREST AT EACH CORNER OF THE STRUCTURE. FASTEN 9 GAUGE OR HEAVIER CHAIN LINK FENCE, 42 INCHES IN HEIGHT, SECURELY TO THE FENCE POSTS WITH WIRE TIES. FASTEN GEOTEXTILE SECURELY TO THE CHAIN LINK FENCE WITH TIES SPACED EVERY 24 INCHES AT THE TOP AND MID SECTION. EMBED GEOTEXTILE AND CHAIN LINK FENCE A MINIMUM OF 18 INCHES BELOW THE WEIR CREST.

4. BACKFILL AROUND THE INLET IN LOOSE 4 INCH LIFTS AND COMPACT UNTIL SOIL IS LEVEL WITH THE NOTCH ELEVATION ON THE ENDS AND TOP ELEVATION ON THE SIDES.

5. STORM DRAIN INLET PROTECTION REQUIRES FREQUENT MAINTENANCE. REMOVE ACCUMULATED SEDIMENT AFTER EACH RAIN EVENT TO MAINTAIN FUNCTION AND AVOID PREMATURE CLOGGING. IF INLET PROTECTION DOES NOT COMPLETELY DRAIN WITHIN 24 HOURS AFTER A STORM EVENT, IT IS CLOGGED. WHEN THIS OCCURS, REMOVE ACCUMULATED SEDIMENT AND CLEAN, OR REPLACE GEOTEXTILE AND STONE.

DETAIL E-9-2 AT-GRADE INLET PROTECTION

STANDARD SYMBOL

AGIP

MAXIMUM DRAINAGE AREA = 1 ACRE

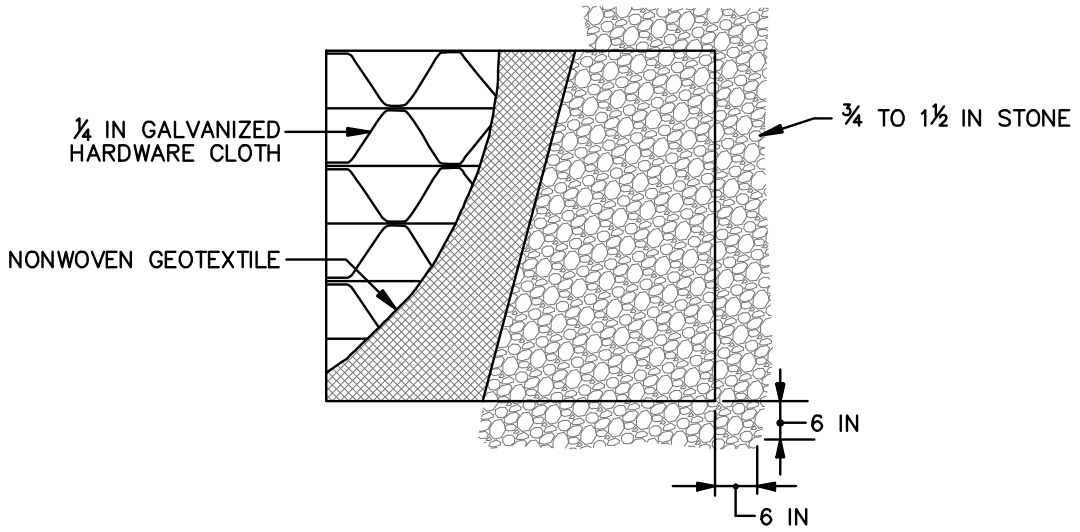

PLAN / CUT AWAY VIEW

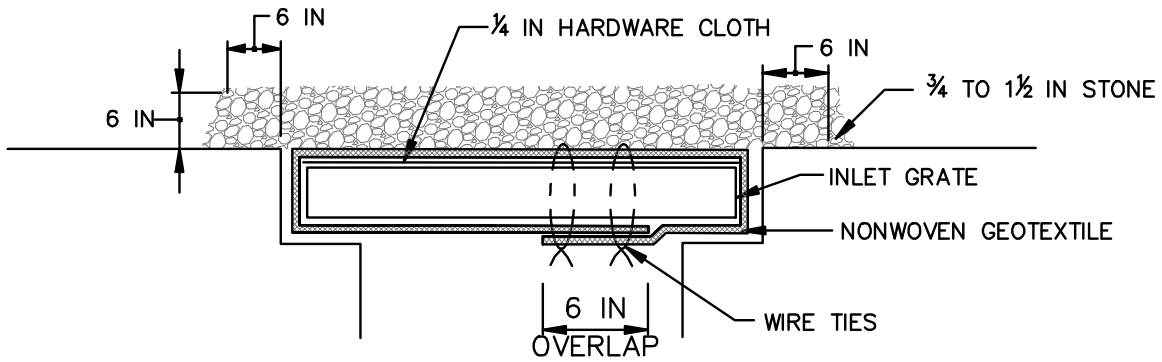

CROSS SECTION

CONSTRUCTION SPECIFICATIONS

1. USE NONWOVEN GEOTEXTILE AS SPECIFIED IN SECTION H–1 MATERIALS.
2. LIFT GRATE AND WRAP WITH NONWOVEN GEOTEXTILE TO COMPLETELY COVER ALL OPENINGS. SECURE WITH WIRE TIES AND SET GRATE BACK IN PLACE.
3. PLACE CLEAN ¾ TO 1½ INCH STONE OR EQUIVALENT RECYCLED CONCRETE 6 INCHES THICK ON THE GRATE.
4. STORM DRAIN INLET PROTECTION REQUIRES FREQUENT MAINTENANCE. REMOVE ACCUMULATED SEDIMENT AFTER EACH RAIN EVENT TO MAINTAIN FUNCTION AND AVOID PREMATURE CLOGGING. IF INLET PROTECTION DOES NOT COMPLETELY DRAIN WITHIN 24 HOURS AFTER A STORM EVENT, IT IS CLOGGED. WHEN THIS OCCURS, REMOVE ACCUMULATED SEDIMENT AND CLEAN, OR REPLACE GEOTEXTILE AND STONE.

DETAIL E-9-3 CURB INLET PROTECTION

STANDARD SYMBOL

CIP

MAXIMUM DRAINAGE AREA = ¼ ACRE

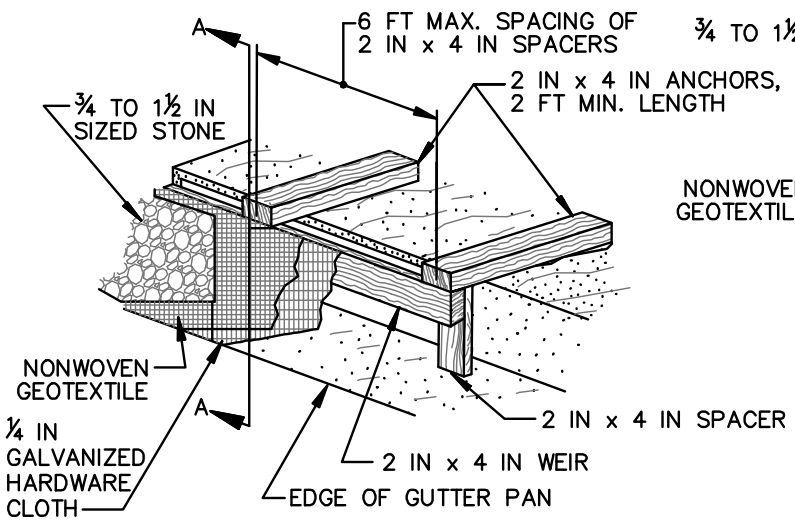

ISOMETRIC

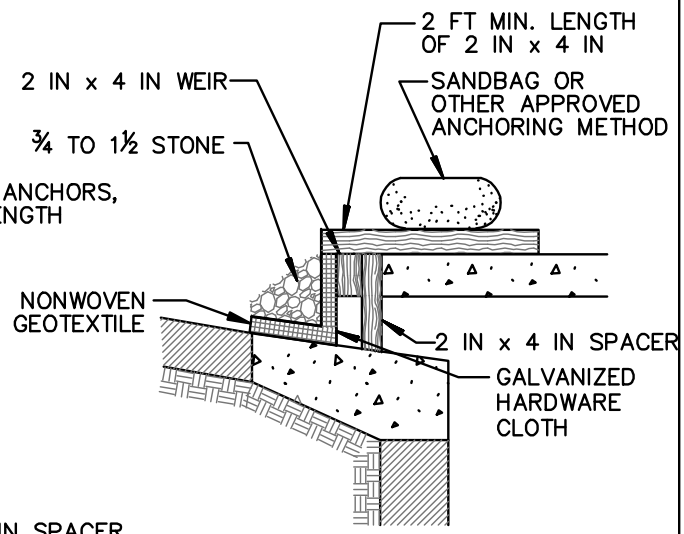

SECTION A–A

CONSTRUCTION SPECIFICATIONS

1. USE NOMINAL 2 INCH x 4 INCH LUMBER
2. USE NONWOVEN GEOTEXTILE AS SPECIFIED IN SECTION H–1 MATERIALS.
3. NAIL THE 2x4 WEIR TO 9 INCH LONG VERTICAL SPACERS (MAXIMUM 6 FEET APART).
4. ATTACH A CONTINUOUS PIECE OF ¼ INCH GALVANIZED HARDWARE CLOTH, WITH A MINIMUM WIDTH OF 30 INCHES AND A MINIMUM LENGTH OF 4 FEET LONGER THAN THE THROAT OPENING, TO THE 2x4 WEIR, EXTENDING IT 2 FEET BEYOND THROAT ON EACH SIDE.
5. PLACE A CONTINUOUS PIECE OF NONWOVEN GEOTEXTILE OF THE SAME DIMENSIONS AS THE HARDWARE CLOTH OVER THE HARDWARE CLOTH AND SECURELY ATTACH TO THE 2x4 WEIR.
6. PLACE THE ASSEMBLY AGAINST THE INLET THROAT AND NAIL TO 2x4 ANCHORS (MINIMUM 2 FEET LENGTH). EXTEND THE ANCHORS ACROSS THE INLET TOP AND HOLD IN PLACE BY SANDBAGS OR OTHER APPROVED ANCHORING METHOD.
7. INSTALL END SPACERS A MINIMUM OF 1 FOOT BEYOND THE ENDS OF THE THROAT OPENING.
8. FORM THE HARDWARE CLOTH AND THE GEOTEXTILE TO THE CONCRETE GUTTER AND FACE OF CURB TO SPAN THE INLET OPENING. COVER THE HARDWARE CLOTH AND GEOTEXTILE WITH CLEAN ¾ TO 1½ INCH STONE OR EQUIVALENT RECYCLED CONCRETE.
9. AT NON–SUMP LOCATIONS, INSTALL A TEMPORARY SANDBAG OR ASPHALT BERM TO PREVENT INLET BYPASS.
10. STORM DRAIN INLET PROTECTION REQUIRES FREQUENT MAINTENANCE. REMOVE ACCUMULATED SEDIMENT AFTER EACH RAIN EVENT TO MAINTAIN FUNCTION AND AVOID PREMATURE CLOGGING. IF INLET PROTECTION DOES NOT COMPLETELY DRAIN WITHIN 24 HOURS AFTER A STORM EVENT, IT IS CLOGGED. WHEN THIS OCCURS, REMOVE ACCUMULATED SEDIMENT AND CLEAN, OR REPLACE GEOTEXTILE AND STONE.

DETAIL E-9-4 MEDIAN INLET PROTECTION

STANDARD SYMBOL

MIP

MAXIMUM DRAINAGE AREA = 1 ACRE

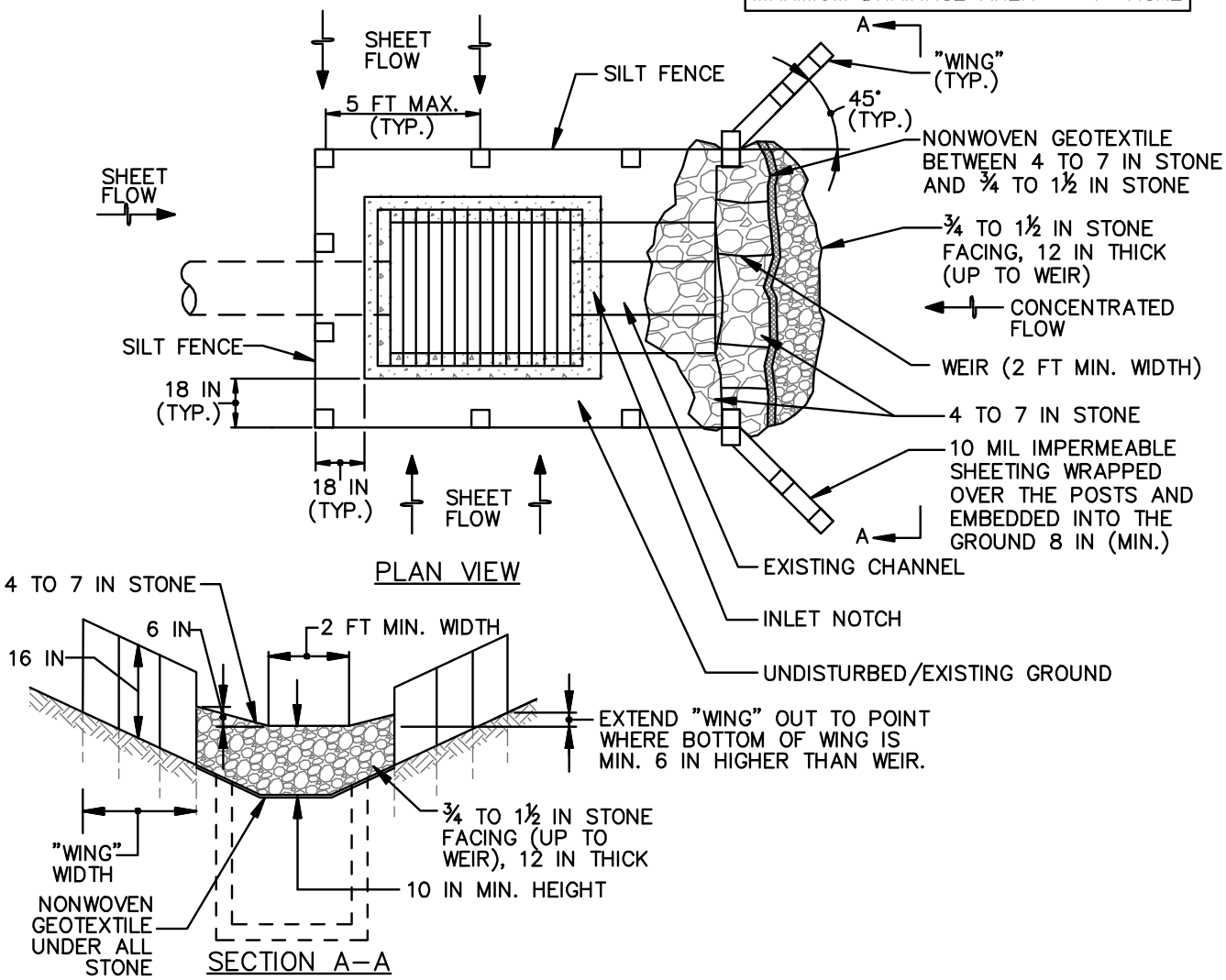

CONSTRUCTION SPECIFICATIONS

1. USE NONWOVEN GEOTEXTILE AS SPECIFIED IN SECTION H–1 MATERIALS.

2. INSTALL SILT FENCE ON ALL SIDES OF INLET RECEIVING SHEET FLOW. FENCE IS TO BE INSTALLED IN ACCORDANCE WITH SILT FENCE DETAIL E–1, EXCEPT POSTS ARE TO BE SPACED A MAXIMUM OF 5 FEET APART.

3. INSTALL STONE STRUCTURE WITH THE WEIR 10 INCHES ABOVE THE INVERT OF THE CHANNEL AND THE WEIR OPENING THE SAME WIDTH AS THE CHANNEL BOTTOM OR 2 FEET MINIMUM. USE CLEAN 4 TO 7 INCH STONE OR EQUIVALENT RECYCLED CONCRETE. PLACE NONWOVEN GEOTEXTILE ON THE UPSTREAM FACE AND COVER WITH A 12 INCH THICK LAYER OF CLEAN ¾ TO 1½ INCH STONE OR EQUIVALENT RECYCLED CONCRETE.

4. CONSTRUCT "WINGS" IN ACCORDANCE WITH DIVERSION FENCE DETAIL C–9.

5. STORM DRAIN INLET PROTECTION REQUIRES FREQUENT MAINTENANCE. REMOVE ACCUMULATED SEDIMENT AFTER EACH RAIN EVENT TO MAINTAIN FUNCTION AND AVOID PREMATURE CLOGGING. IF INLET PROTECTION DOES NOT COMPLETELY DRAIN WITHIN 24 HOURS AFTER A STORM EVENT, IT IS CLOGGED. WHEN THIS OCCURS, REMOVE ACCUMULATED SEDIMENT AND CLEAN, OR REPLACE GEOTEXTILE AND STONE.

DETAIL E-9-5 MEDIAN SUMP INLET PROTECTION

STANDARD SYMBOL

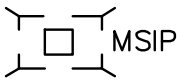

MAXIMUM DRAINAGE AREA = 1 ACRE PER SIDE

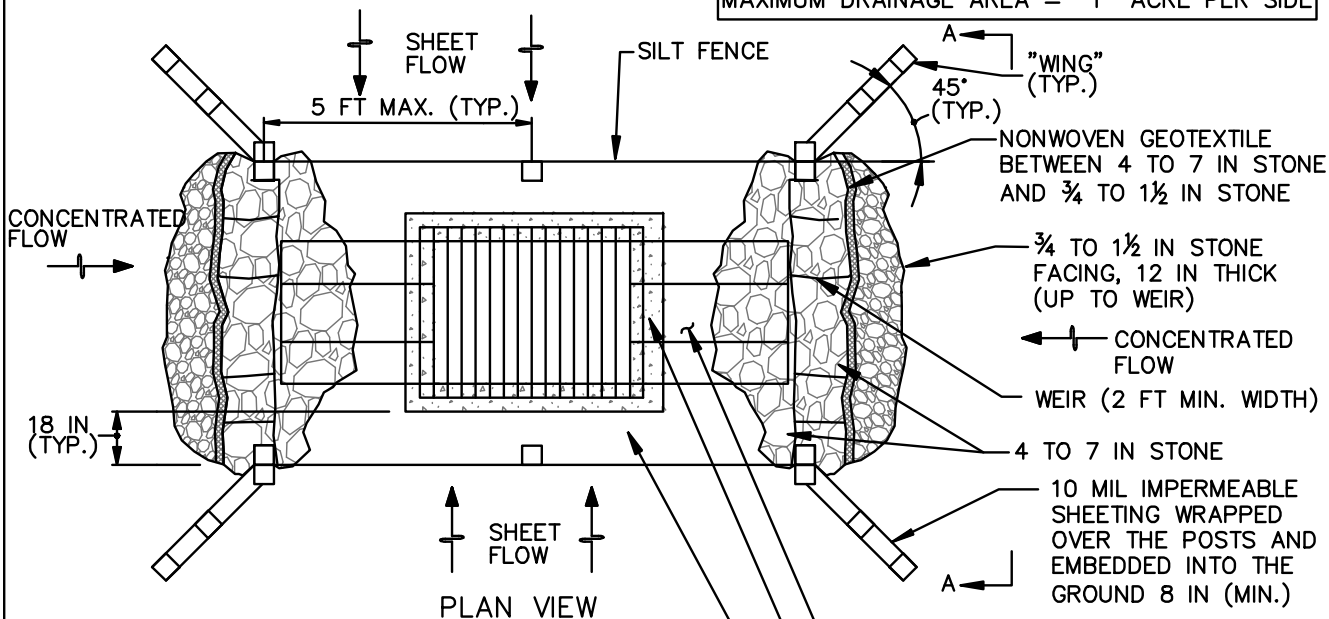

PLAN VIEW

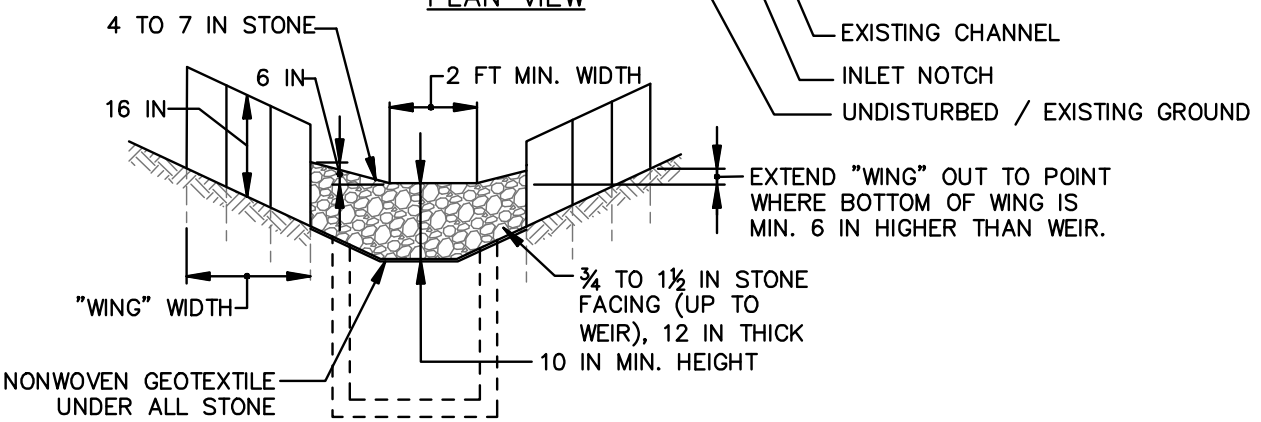

SECTION A–A

CONSTRUCTION SPECIFICATIONS

1. USE NONWOVEN GEOTEXTILE AS SPECIFIED IN SECTION H–1 MATERIALS.

2. INSTALL SILT FENCE ON ALL SIDES OF INLET RECEIVING SHEET FLOW. FENCE IS TO BE INSTALLED IN ACCORDANCE WITH SILT FENCE DETAIL E–1, EXCEPT POSTS ARE TO BE SPACED A MAXIMUM OF 5 FEET APART.

3. INSTALL EACH STONE STONE STRUCTURE WITH THE WEIR 10 INCHES ABOVE THE INVERT OF THE CHANNEL AND THE WEIR OPENING THE SAME WIDTH AS THE CHANNEL BOTTOM OR 2 FEET MINIMUM. USE CLEAN 4 TO 7 INCH STONE OR EQUIVALENT RECYCLED CONCRETE. PLACE NONWOVEN GEOTEXTILE ON THE UPSTREAM FACE AND COVER WITH A 12 INCH THICK LAYER OF CLEAN ¾ TO 1½ INCH STONE OR EQUIVALENT RECYCLED CONCRETE.

4. CONSTRUCT "WINGS" IN ACCORDANCE WITH DIVERSION FENCE DETAIL C–9.

5. STORM DRAIN INLET PROTECTION REQUIRES FREQUENT MAINTENANCE. REMOVE ACCUMULATED SEDIMENT AFTER EACH RAIN EVENT TO MAINTAIN FUNCTION AND AVOID PREMATURE CLOGGING. IF INLET PROTECTION DOES NOT COMPLETELY DRAIN WITHIN 24 HOURS AFTER A STORM EVENT, IT IS CLOGGED. WHEN THIS OCCURS, REMOVE ACCUMULATED SEDIMENT AND CLEAN, OR REPLACE GEOTEXTILE AND STONE.

DETAIL E-9-6 COMBINATION INLET PROTECTION

STANDARD SYMBOL

COIP

MAXIMUM DRAINAGE AREA = ¼ ACRE

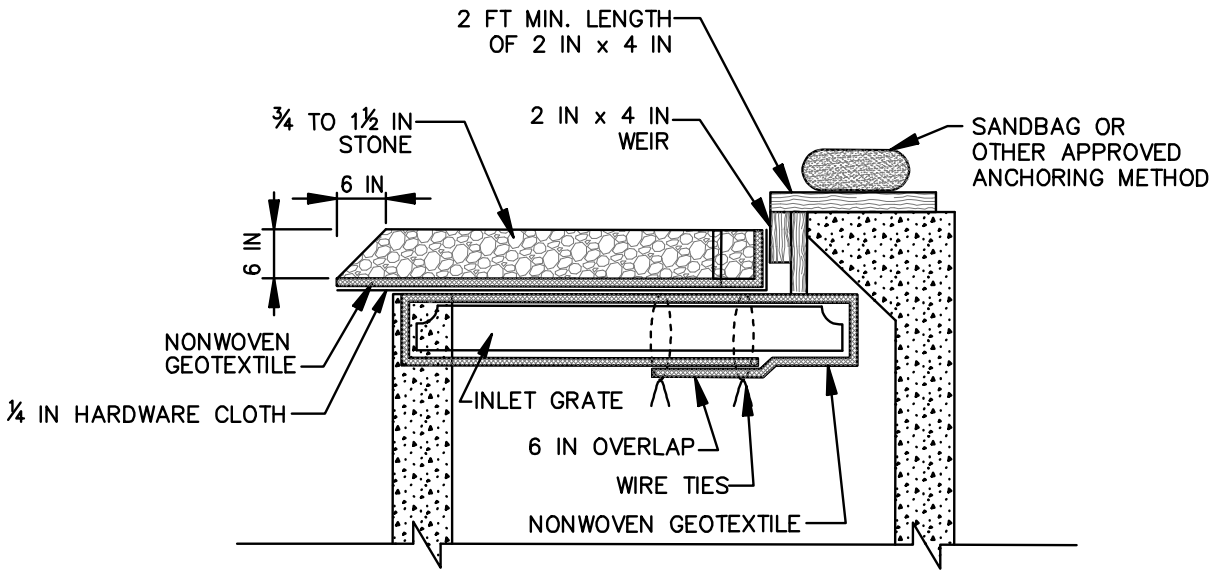

SECTION

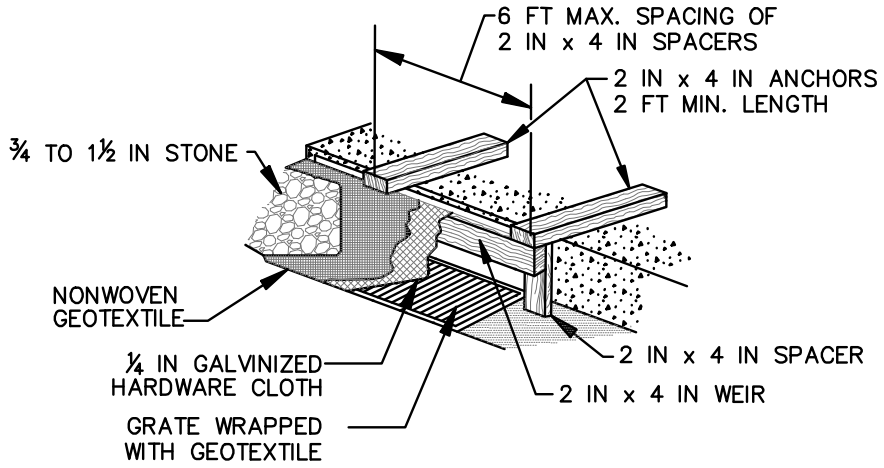

ISOMETRIC VIEW

1 OF 2

DETAIL E-9-6 COMBINATION INLET PROTECTION

STANDARD SYMBOL

COIP

CONSTRUCTION SPECIFICATIONS

1. USE NOMINAL 2 INCH x 4 INCH LUMBER.
2. USE NONWOVEN GEOTEXTILE AS SPECIFIED IN SECTION H–1 MATERIALS.
3. LIFT GRATE, AND WRAP WITH NONWOVEN GEOTEXTILE TO COMPLETELY COVER ALL OPENINGS, THEN SET GRATE BACK IN PLACE.
4. ATTACH A CONTINUOUS PIECE OF ½ INCH GALVANIZED HARDWARE CLOTH WITH A MINIMUM WIDTH OF 30 INCHES AND A MINIMUM LENGTH OF 4 FEET LONGER THAN THE THROAT OPENING, TO THE 2X4 WEIR, EXTENDING 2 FEET BEYOND THROAT ON EACH SIDE.
5. PLACE A CONTINUOUS PIECE OF NONWOVEN GEOTEXTILE THE SAME DIMENSIONS AS THE HARDWARE CLOTH OVER THE HARDWARE CLOTH AND SECURELY ATTACH IT TO THE WEIR.
6. NAIL THE 2X4 WEIR TO THE TOP OF A 9 INCH LONG VERTICAL SPACER TO BE LOCATED BETWEEN THE WEIR AND THE INLET FACE (MAXIMUM 4 FEET APART).
7. PLACE THE ASSEMBLY AGAINST THE INLET THROAT AND NAIL TO 2X4 ANCHORS (MINIMUM 2 FOOT LENGTHS OF 2x4 INCH TO THE TOP OF THE WEIR AT SPACER LOCATIONS). EXTEND 2X4 ANCHORS ACROSS THE INLET TOP AND HOLD IN PLACE BY SANDBAGS OR OTHER APPROVED ANCHORING METHOD.
8. INSTALL END SPACERS A MINIMUM OF 1 FOOT BEYOND BOTH ENDS OF THE THROAT OPENING.
9. FORM THE ¼ INCH HARDWARE CLOTH AND THE GEOTEXTILE TO THE CONCRETE GUTTER AND AGAINST THE FACE OF THE CURB ON BOTH SIDES OF THE INLET. PLACE CLEAN ¾ TO 1½ INCH STONE OR EQUIVALENT RECYCLED CONCRETE OVER THE HARDWARE CLOTH AND GEOTEXTILE IN SUCH A MANNER TO PREVENT WATER FROM ENTERING THE INLET UNDER OR AROUND THE GEOTEXTILE.
10. AT NON–SUMP LOCATIONS, INSTALL A TEMPORARY SANDBAG OR ASPHALT BERM TO PREVENT INLET BYPASS.
11. STORM DRAIN INLET PROTECTION REQUIRES FREQUENT MAINTENANCE. REMOVE ACCUMULATED SEDIMENT AFTER EACH RAIN EVENT TO MAINTAIN FUNCTION AND AVOID PREMATURE CLOGGING. IF INLET PROTECTION DOES NOT COMPLETELY DRAIN WITHIN 24 HOURS AFTER A STORM EVENT, IT IS CLOGGED. WHEN THIS OCCURS, REMOVE ACCUMULATED SEDIMENT AND CLEAN, OR REPLACE GEOTEXTILE AND STONE.

DETAIL E-9-7 GABION INLET PROTECTION

STANDARD SYMBOL

GIP

MAXIMUM DRAINAGE AREA = 1½ ACRE

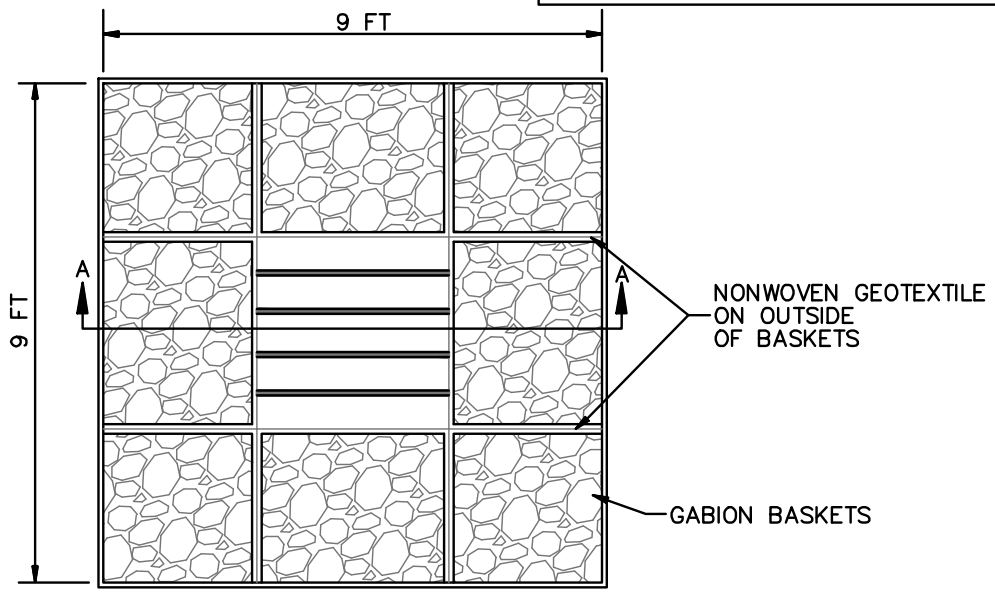

PLAN VIEW

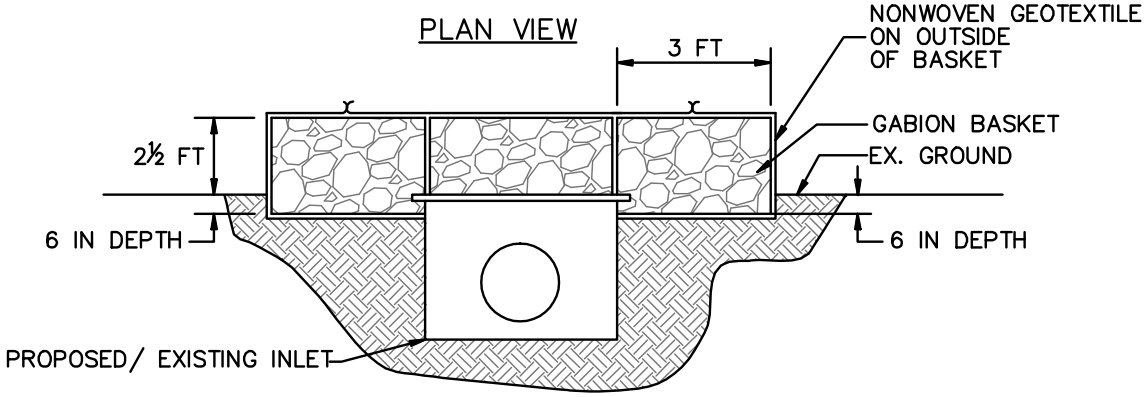

SECTION A–A

CONSTRUCTION SPECIFICATIONS

1. USE BASKETS MADE OF 11 GAUGE WIRE OR HEAVIER.
2. WRAP 3 FEET x 3 FEET GABION BASKETS (LENGTH VARIABLE) WITH NONWOVEN GEOTEXTILE, AS SPECIFIED IN SECTION H–1 MATERIALS, OVERLAPPING AT THE TOP AND FASTEN THE GEOTEXTILE AT THE TOP OF THE BASKET WITH WIRE FASTENERS (HOG RINGS) AT A MAXIMUM OF 1 FOOT INTERVALS ALONG THE SEAM.
3. AVOID TEARING OR DAMAGING GEOTEXTILE.
4. ENTRENCH GABION BASKETS TO A DEPTH OF 6 INCHES.
5. PLACE AND INTERLOCK GABION BASKETS WITH NO GAPS.
6. FILL GABION BASKETS WITH CLEAN 4 TO 7 INCH STONE OR EQUIVALENT RECYCLED CONCRETE WITHOUT REBAR OR MESH.
7. STORM DRAIN INLET PROTECTION REQUIRES FREQUENT MAINTENANCE. REMOVE ACCUMULATED SEDIMENT AFTER EACH RAIN EVENT TO MAINTAIN FUNCTION AND AVOID PREMATURE CLOGGING. IF INLET PROTECTION DOES NOT COMPLETELY DRAIN WITHIN 24 HOURS AFTER A STORM EVENT, IT IS CLOGGED. WHEN THIS OCCURS, REMOVE ACCUMULATED SEDIMENT AND CLEAN, OR REPLACE GEOTEXTILE AND STONE.

SECTION F - DEWATERING

DEWATERING STRATEGY

Dewatering refers to the act of removing water from an excavated area or from a sediment trap/basin on construction sites by retaining the sediment and discharging the clear water. The conditions at a particular construction site may necessitate the use of more than one of these practices, or a combination thereof.

Additional treatment beyond an approved dewatering practice may be needed to reduce turbidity in the discharge to receiving waters. Treatments include, but are not limited to: discharging to a vegetative filter; using coagulants to increase settling; or pumping to a sediment trap or basin.

The procedures for dewatering must be specified on the plan and included in the sequence of construction. Atypical site conditions may require innovative dewatering designs. Dewatering measures not referenced in this standard may be used with the consent of the approval authority. **Pumping sediment-laden water into Waters of the State is strictly prohibited.**

APPROVED PRACTICES FOR DEWATERING

1. Detail F-1 Removable Pumping Station.

2. Detail F-2 Sump Pit.

3. Detail F-3 Portable Sediment Tank.

4. Detail F-4 Filter Bag.

5. An approved sediment trap or basin. Pump water to an existing sediment trap or basin where the entire volume can be contained without overflowing to receiving waters or without exceeding the design of the sediment control structure (e.g., do not exceed the dry storage volume or discharge over the weir crest).

F-1 STANDARDS AND SPECIFICATIONS

FOR

REMOVABLE PUMPING STATION

Definition

A perforated, vertical standpipe wrapped with hardware cloth and geotextile and placed inside a larger perforated pipe. The outer pipe is enveloped by hardware cloth and washed stone. Water is pumped from the inner pipe and discharged to a stable area.

Purpose

To remove and filter sediment-laden water from excavations, traps, or basins.

Conditions Where Practice Applies

When dewatering is needed in association with excavations, trenches, cofferdams, sediment traps or basins. This practice is preferred over sump pits on projects where a long duration of pumping is expected.

Design Criteria

The location of removable pumping stations must be included on the plan. When used in a trap or basin, install pumping station concurrently with the construction of the trap or basin. A removable pumping station may be relocated to optimize its use, but changes to the discharge location must be coordinated with the appropriate enforcement authority.

Maintenance

The removable pumping station requires frequent maintenance. If the system clogs, the inner pipe needs to be pulled out and the geotextile replaced. The point of discharge must be kept free of erosion.

DETAIL F-1 REMOVABLE PUMPING STATION

STANDARD SYMBOL

⊠RPS

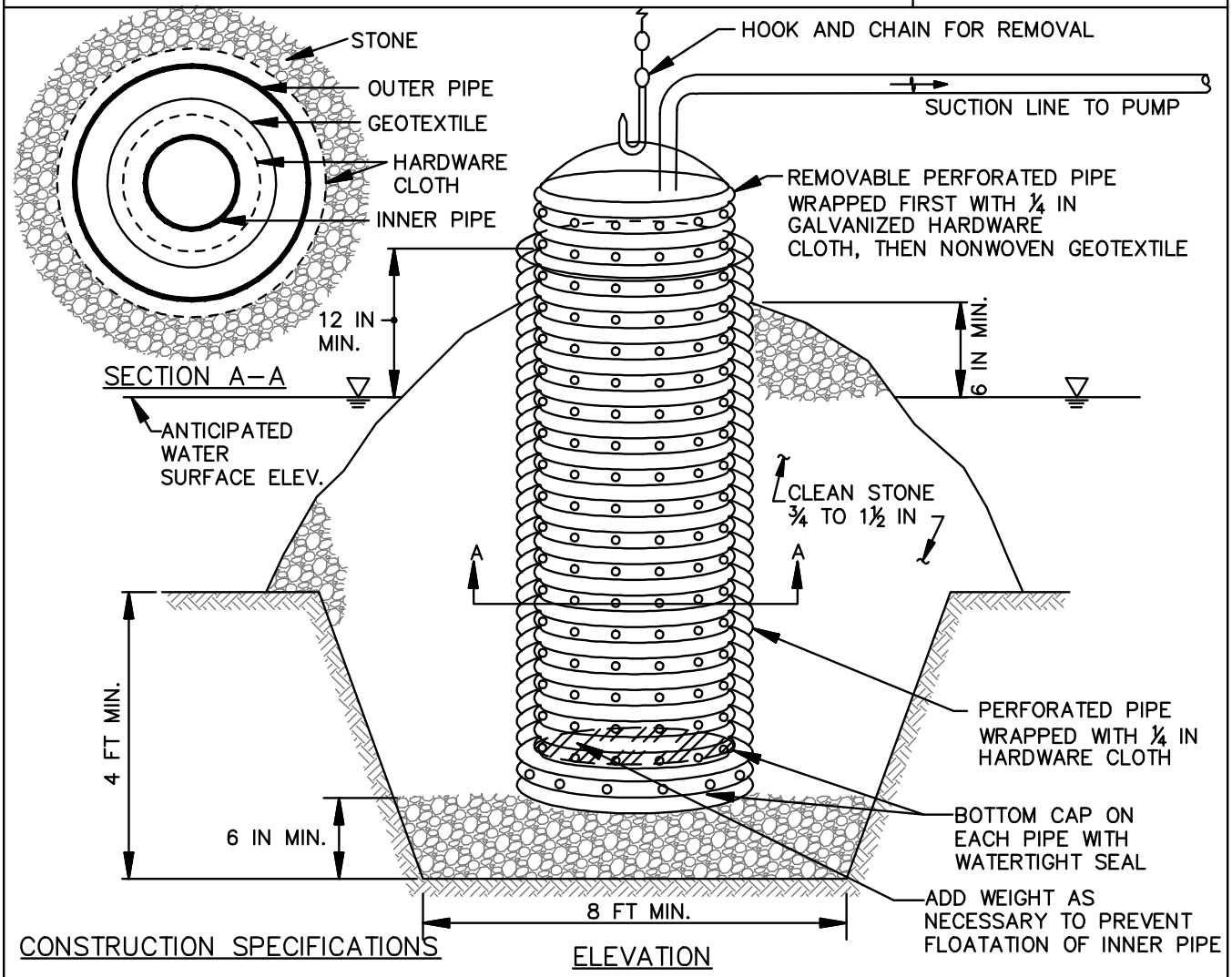

CONSTRUCTION SPECIFICATIONS

1. USE CORRUGATED METAL OR PLASTIC PIPE WITH 1 INCH DIAMETER PERFORATIONS 6 INCHES ON CENTER.
2. USE A MINIMUM 12 INCH DIAMETER INNER PIPE WITH AN OUTER PIPE A MINIMUM 6 INCHES LARGER IN DIAMETER. BOTTOM OF EACH PIPE MUST BE CAPPED WITH WATERTIGHT SEAL.
3. WRAP EACH PIPE WITH ¼ INCH GALVANIZED HARDWARE CLOTH. ON INNER PIPE WRAP NONWOVEN GEOTEXTILE, AS SPECIFIED IN SECTION H–1 MATERIALS, OVER THE HARDWARE CLOTH.
4. EXCAVATE 8 FEET X 8 FEET X 4 FEET DEEP PIT FOR PIPE PLACEMENT. PLACE CLEAN ¾ TO 1½ INCH STONE OR EQUIVALENT RECYCLED CONCRETE, 6 INCHES IN DEPTH PRIOR TO PIPE PLACEMENT.
5. SET TOP OF INNER AND OUTER PIPES MINIMUM 12 INCHES ABOVE ANTICIPATED WATER SURFACE ELEVATION (OR RISER CREST ELEVATION WHEN DEWATERING A BASIN).
6. BACKFILL PIT AROUND THE OUTER PIPE WITH ¾ TO 1½ INCH CLEAN STONE OR EQUIVALENT RECYCLED CONCRETE AND EXTEND STONE A MINIMUM OF 6 INCHES ABOVE ANTICIPATED WATER SURFACE ELEVATION.
7. DISCHARGE TO A STABLE AREA AT A NONEROSIVE RATE.
8. A REMOVABLE PUMPING STATION REQUIRES FREQUENT MAINTENANCE. IF SYSTEM CLOGS, PULL OUT INNER PIPE AND REPLACE GEOTEXTILE. KEEP POINT OF DISCHARGE FREE OF EROSION.

F-2 STANDARDS AND SPECIFICATIONS

FOR

SUMP PIT

Definition

A perforated vertical standpipe wrapped with hardware cloth and geotextile placed in an excavated pit that is backfilled with stone. Water is pumped from the standpipe to a stable discharge area.

Purpose

To remove and filter sediment-laden water from excavations.

Conditions Where Practice Applies

When dewatering is needed for a short duration (i.e., less than 3 months) in association with excavations, trenches, cofferdams, sediment traps or basins.

Design Criteria

The location of sump pits must be included on the plan. A sump pit may be relocated to optimize its use but changes to the discharge location must be coordinated with the appropriate enforcement authority.

Maintenance

The sump pit requires frequent maintenance. If the system clogs, the perforated pipe needs to be removed and the geotextile and stone replaced. The point of discharge must be kept free of erosion.

DETAIL F-2 SUMP PIT

STANDARD SYMBOL

⊠SP

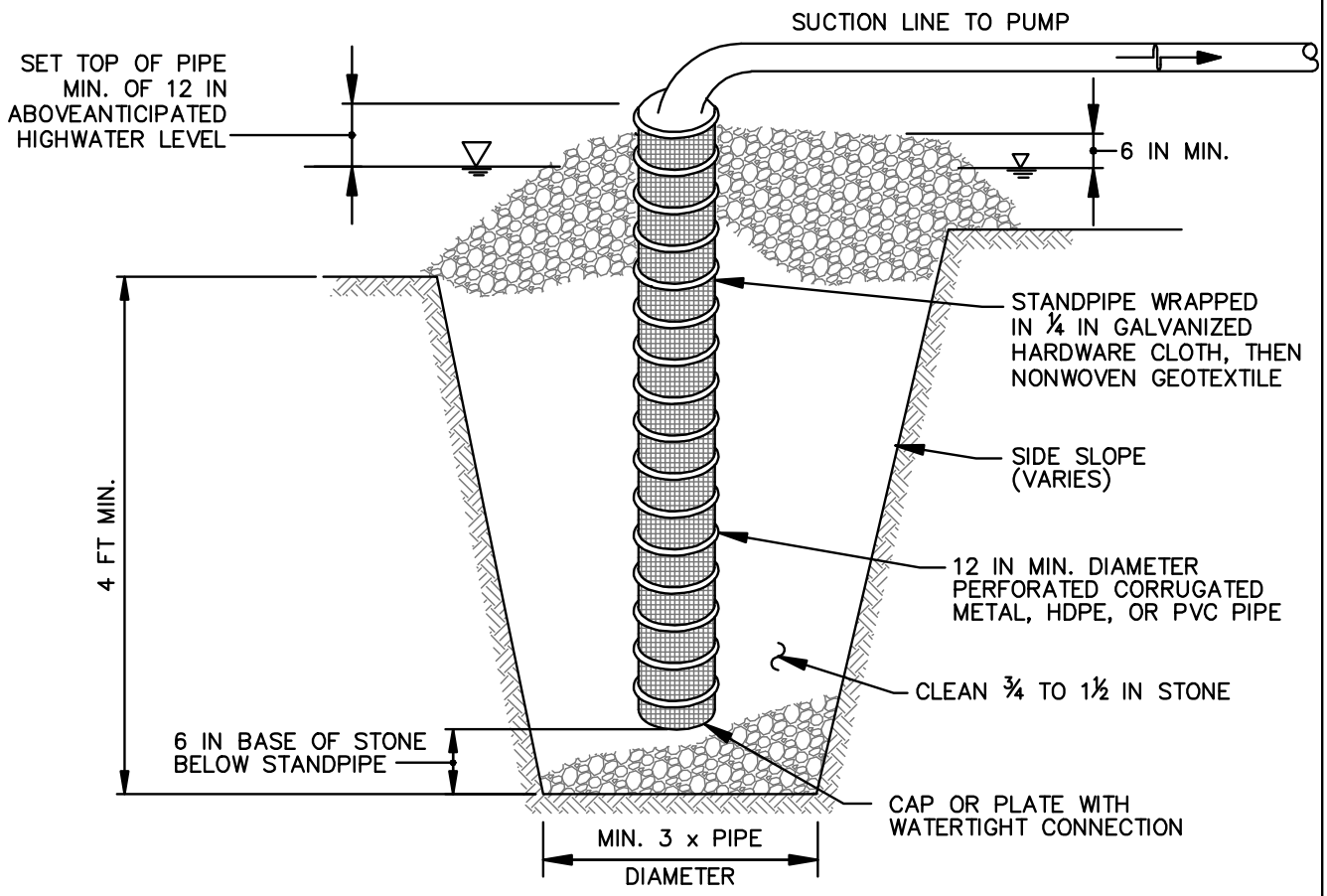

ELEVATION

CONSTRUCTION SPECIFICATIONS

1. USE 12 INCH OR LARGER DIAMETER CORRUGATED METAL, HDPE, OR PVC PIPE WITH 1 INCH DIAMETER PERFORATIONS, 6 INCHES ON CENTER. BOTTOM OF PIPE MUST BE CAPPED WITH WATERTIGHT SEAL.
2. WRAP PIPE WITH ¼ INCH GALVANIZED HARDWARE CLOTH AND WRAP NONWOVEN GEOTEXTILE, AS SPECIFIED IN SECTION H–1 MATERIALS, OVER THE HARDWARE CLOTH.
3. EXCAVATE PIT TO THREE TIMES THE PIPE DIAMETER AND FOUR FEET IN DEPTH. PLACE ¾ TO 1½ INCH STONE OR EQUIVALENT RECYCLED CONCRETE, 6 INCHES IN DEPTH PRIOR TO PIPE PLACEMENT.
4. SET TOP OF PIPE MINIMUM 12 INCHES ABOVE ANTICIPATED WATER SURFACE ELEVATION.
5. BACKFILL PIT AROUND THE PIPE WITH ¾ TO 1½ INCH CLEAN STONE OR EQUIVALENT RECYCLED CONCRETE AND EXTEND STONE A MINIMUM OF 6 INCHES ABOVE ANTICIPATED WATER SURFACE ELEVATION.
6. DISCHARGE TO A STABLE AREA AT A NONEROSIVE RATE.
7. A SUMP PIT REQUIRES FREQUENT MAINTENANCE. IF SYSTEM CLOGS, REMOVE PERFORATED PIPE AND REPLACE GEOTEXTILE AND STONE. KEEP POINT OF DISCHARGE FREE OF EROSION.

F-3 STANDARDS AND SPECIFICATIONS

FOR

PORTABLE SEDIMENT TANK

Definition

A compartmented container consisting of a perforated inner pipe lined with hardware cloth and geotextile, placed inside a larger pipe. Water is pumped into the inner pipe and discharged from the outer pipe.

Purpose

To settle and filter sediment-laden water prior to discharge.

Conditions Where Practice Applies

When dewatering is needed in association with excavations, trenches, cofferdams, sediment traps or basins, especially where excavations are deep or space is limited.

Design Criteria

The sediment tank is to be shown on the plan and located for ease of clean-out and disposal of the trapped sediment.

Maintenance

The portable sediment tank requires frequent maintenance. Remove accumulated sediment from inner pipe when it reaches two feet in depth. If the system clogs, the inner pipe needs to be pulled out, accumulated sediment removed, and the geotextile replaced. The point of discharge must be kept free of erosion.

DETAIL F-3 PORTABLE SEDIMENT TANK

STANDARD SYMBOL

⊠PST

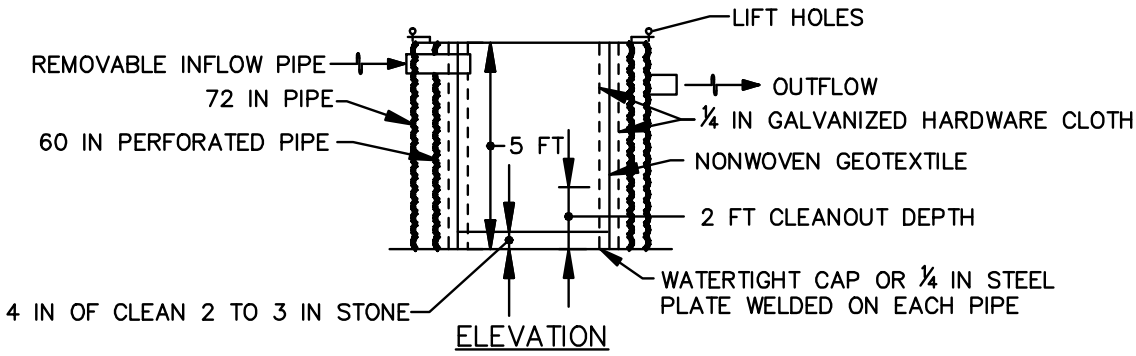

ELEVATION

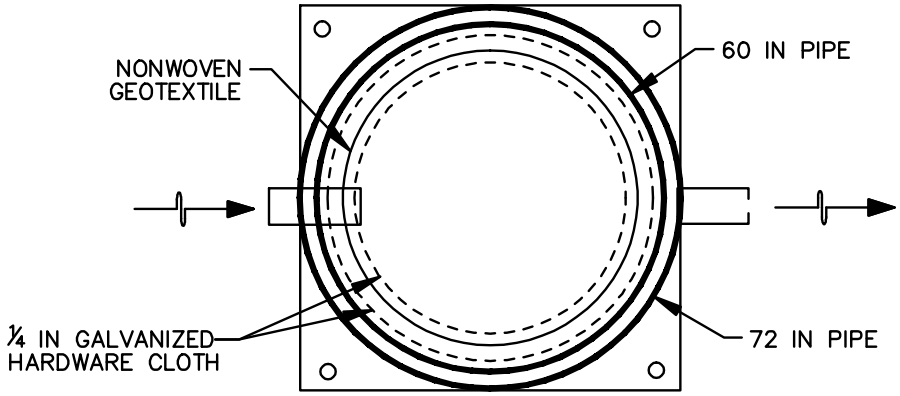

PLAN VIEW

CONSTRUCTION SPECIFICATIONS

1. PROVIDE 1 CUBIC FOOT OF STORAGE FOR EACH GALLON PER MINUTE OF PUMP CAPACITY. REQUIRED STORAGE VOLUME MAY BE ATTAINED BY PLACEMENT OF TANKS IN PARALLEL WITH INFLOW EVENLY DISTRIBUTED AMONG TANKS. OVERTOPPING OF TANKS IS NOT PERMITTED.

2. USE 60 INCH CORRUGATED METAL OR PLASTIC PIPE WITH 1 INCH DIAMETER PERFORATIONS, 6 INCHES ON CENTER FOR THE INNER PIPE. LINE PIPE WITH NONWOVEN GEOTEXTILE, AS SPECIFIED IN SECTION H–1 MATERIALS, SANDWICHED BETWEEN, AND ATTACHED TO, ¼ INCH HARDWARE CLOTH.

3. OVERLAP GEOTEXTILE 8 INCHES MINIMUM AT VERTICAL SEAM AND AT THE BOTTOM PLATE.

4. ANCHOR GEOTEXTILE AT BOTTOM OF TANK WITH 4 INCHES OF 2 TO 3 INCH CLEAN STONE OR EQUIVALENT RECYCLED CONCRETE.

5. USE 72 INCH CORRUGATED METAL OR PLASTIC OUTER PIPE WITH PERMANENT OUTFLOW PIPE WITH INVERT LOWER THAN INFLOW PIPE

6. INFLOW PIPE MUST DISCHARGE INTO INNER PIPE AND BE REMOVABLE.

7. PLACE TANK ON LEVEL SURFACE AND DISCHARGE TO A STABLE AREA AT A NONEROSIVE RATE.

8. A PORTABLE SEDIMENT TANK REQUIRES FREQUENT MAINTENANCE. REMOVE ACCUMULATED SEDIMENT FROM INNER PIPE WHEN IT REACHES TWO FEET IN DEPTH. IF SYSTEM CLOGS, PULL OUT INNER PIPE, REMOVE ACCUMULATED SEDIMENT, AND REPLACE GEOTEXTILE. KEEP POINT OF DISCHARGE FREE OF EROSION.

F-4 STANDARDS AND SPECIFICATIONS

FOR

FILTER BAG

Definition

A geotextile bag through which sediment-laden water is pumped.

Purpose

To filter sediment-laden water prior to discharge.

Conditions Where Practice Applies

When dewatering is needed in association with excavations, trenches, cofferdams, sediment traps or basins.

Design Criteria

The filter bag should be placed in a location that allows for ease of disposal of the trapped sediment and has minimal interference with construction activities and pedestrian traffic.

Maintenance

If the filter bag clogs, it needs to be replaced. Rips, tears, and punctures also necessitate replacement of the filter bag. The connection between the pump hose and the filter bag needs to be kept water tight during operation. If the bedding becomes displaced, it must be replaced.

DETAIL F-4 FILTER BAG

STANDARD SYMBOL

⊠FB

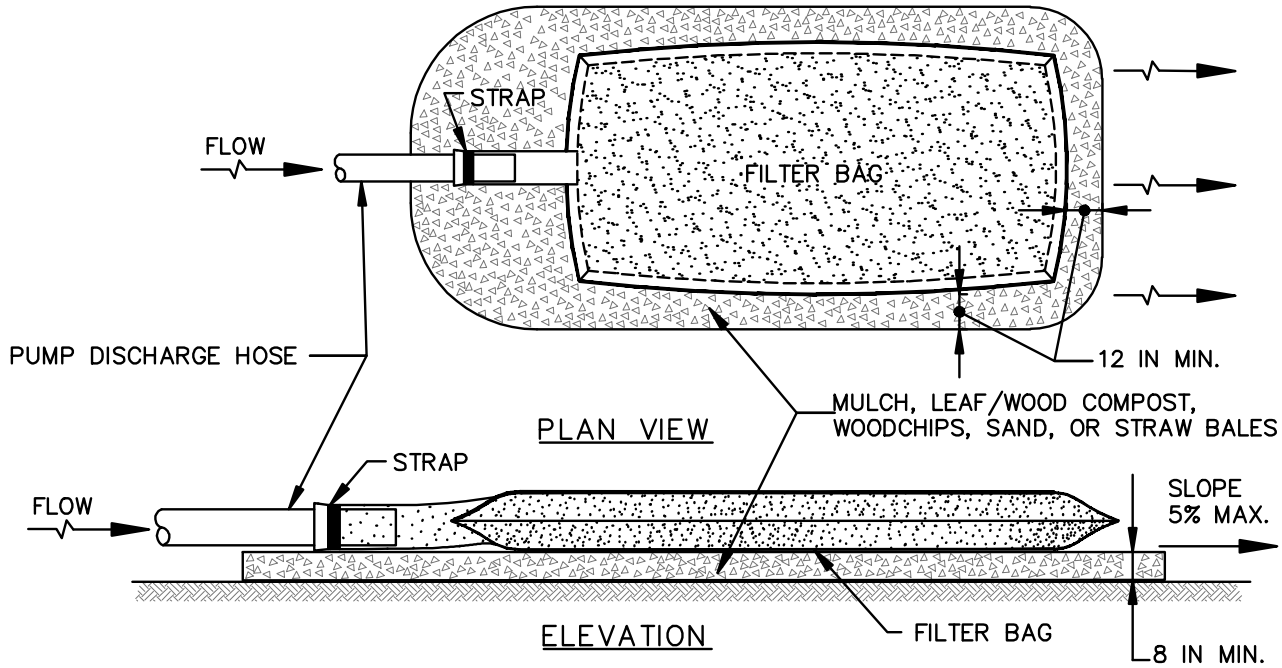

CONSTRUCTION SPECIFICATIONS

1. TIGHTLY SEAL SLEEVE AROUND THE PUMP DISCHARGE HOSE WITH A STRAP OR SIMILAR DEVICE.

2. PLACE FILTER BAG ON SUITABLE BASE (E.G., MULCH, LEAF/WOOD COMPOST, WOODCHIPS, SAND, OR STRAW BALES) LOCATED ON A LEVEL OR 5% MAXIMUM SLOPING SURFACE. DISCHARGE TO A STABILIZED AREA. EXTEND BASE A MINIMUM OF 12 INCHES FROM EDGES OF BAG.

3. CONTROL PUMPING RATE TO PREVENT EXCESSIVE PRESSURE WITHIN THE FILTER BAG IN ACCORDANCE WITH THE MANUFACTURER RECOMMENDATIONS. AS THE BAG FILLS WITH SEDIMENT, REDUCE PUMPING RATE.

4. REMOVE AND PROPERLY DISPOSE OF FILTER BAG UPON COMPLETION OF PUMPING OPERATIONS OR AFTER BAG HAS REACHED CAPACITY, WHICHEVER OCCURS FIRST. SPREAD THE DEWATERED SEDIMENT FROM THE BAG IN AN APPROVED UPLAND AREA AND STABILIZE WITH SEED AND MULCH BY THE END OF THE WORK DAY. RESTORE THE SURFACE AREA BENEATH THE BAG TO ORIGINAL CONDITION UPON REMOVAL OF THE DEVICE.

5. USE NONWOVEN GEOTEXTILE WITH DOUBLE STITCHED SEAMS USING HIGH STRENGTH THREAD. SIZE SLEEVE TO ACCOMMODATE A MAXIMUM 4 INCH DIAMETER PUMP DISCHARGE HOSE. THE BAG MUST BE MANUFACTURED FROM A NONWOVEN GEOTEXTILE THAT MEETS OR EXCEEDS MINIMUM AVERAGE ROLL VALUES (MARV) FOR THE FOLLOWING:

GRAB TENSILE	250 LB	ASTM D-4632
PUNCTURE	150 LB	ASTM D-4833
FLOW RATE	70 GAL/MIN/FT^2	ASTM D-4491
PERMITTIVITY (SEC^{-1})	1.2 SEC^{-1}	ASTM D-4491
UV RESISTANCE	70% STRENGTH @ 500 HOURS	ASTM D-4355
APPARENT OPENING SIZE (AOS)	0.15-0.18 MM	ASTM D-4751
SEAM STRENGTH	90%	ASTM D-4632

6. REPLACE FILTER BAG IF BAG CLOGS OR HAS RIPS, TEARS, OR PUNCTURES. DURING OPERATION KEEP CONNECTION BETWEEN PUMP HOSE AND FILTER BAG WATER TIGHT. REPLACE BEDDING IF IT BECOMES DISPLACED.

SECTION G – SEDIMENT TRAPPING

G-1 STANDARDS AND SPECIFICATIONS

FOR

SEDIMENT TRAPS

Definition

A temporary pit formed by excavation and/or construction of an embankment with an appropriate outlet.

Purpose

To intercept sediment-laden runoff and retain sediment in order to protect drainage ways, properties, and rights-of-way downstream of the sediment trap from sedimentation.

Conditions Where Practice Applies

At points of concentrated discharge from disturbed areas.

There are three types of standard traps: Pipe Outlet Trap ST-I, Stone/Riprap Outlet Trap ST-II, and Riprap Outlet Sediment Trap ST-III.

Design Criteria

Practice	Trap Type	Maximum Drainage Area	Volume/Acre of Drainage Area	Type of Storage
ST-I	Pipe Outlet	5.0 acres	3,600 ft^3	½ wet - ½ dry
ST-II	Stone/Riprap Outlet	10.0 acres	3,600 ft^3	½ wet - ½ dry
ST-III	Riprap Outlet	10.0 acres	5,400 ft^3	all wet

1. The storage volume for sediment traps I and II is to be divided equally into "dry" storage (1800 ft^3/acre) and "wet" storage (1800 ft^3/acre). The dry storage will draw down to the wet pool elevation. Sediment trap III consists of only "wet" storage and the volume required is 5400 cubic feet per acre of drainage area.

2. The clean out elevation is ½ the wet storage depth for ST-I and ST-II, and ¼ the wet storage depth for ST-III.

3. The trap bottom should be level. Indicate bottom dimensions on plan view. Show contours/grading of traps on plans.

4. **For the pipe outlet sediment trap (ST-I) the top of the trap embankment must not exceed 5 feet in height as measured at the low point of the original ground along the centerline of the embankment. For the stone/riprap and riprap outlet traps (ST-II and ST-III) the top of the trap embankment must not exceed 4 feet in height.** The embankment must have a minimum 4 foot wide top and side slopes of 2:1 or flatter.

5. Establish points of concentrated inflow and specify the type of inflow protection. See Section D - Erosion Control.

6. Provide earth berm(s) where necessary to ensure that runoff is directed to the protected inflow points of the trap.

7. The top elevation of any dike directing water to a sediment trap is to be equal to, or higher than, the elevation of the trap embankment.

8. Interior slopes are to be 2:1 or flatter.

9. Locate inflow points to maximize the flow distance to the outlet. Where a 2:1 effective length to width ratio between inflow and outflow cannot be obtained, baffles are required. See Detail G-2-4 Baffle Boards.

10. Locate sediment trap to ensure access for cleanout and disposal of the trapped sediment.

11. Locate sediment trap to discharge onto stable ground, stable channel, or into a storm drain system. Discharge to a buffer may be required. Provide an outlet that conveys the discharge in a non-erosive manner to a stable area. Protect against scour at the discharge end of the spillway in accordance with the Section D-4 Outlet Protection.

12. Where discharge occurs at the property line, comply with local ordinances and drainage easement requirements.

13. Do not locate trap any closer than 20 feet from an existing building foundation. Traps should not be located in areas where the groundwater elevation is higher than the bottom of the trap. Sediment traps in structural fill areas (e.g., proposed roadways and building foundations) are discouraged. Upon removal, the wet soil around the trap must also be removed to facilitate compaction. The trap should be located to avoid conflicts with utilities.

14. Silt fence or other sediment control practices may be required during trap installation and removal.

15. Specify on the plan the type(s) of dewatering practice(s) to be used in accordance with Section F - Dewatering.

Note: If any of the design criteria presented here cannot be met, see Section G-2 Sediment Basins.

TRAP DATA REQUIRED ON EROSION AND SEDIMENT CONTROL PLAN

Show on the plan all the information necessary to properly construct and maintain the trap, including type and location of inflow protection. Provide the following information in tabular form for each trap.

1. Trap number.
2. Type of trap (ST-I, ST-II, or ST-III).
3. Drainage area (initial, interim, and final).
4. Storage volume required (wet, dry, and total).
5. Storage volume provided (wet, dry, and total).
6. Elevations (bottom, wet storage, dry storage, outlet, and cleanout).
7. ST-I: riser and barrel diameters and outlet protection dimensions.
8. ST-II: weir length, existing elevation at end of outlet.
9. ST-III: outlet depth (a) and width (b).
10. Embankment height, width, and elevation.
11. Bottom dimensions.

Maintenance

Sediment and debris must be removed and the trap restored to its original dimensions when sediment accumulates to the cleanout elevation (50% of the wet storage depth for ST-I and ST-II and 25% of the storage depth for ST-III). Removed sediment must be deposited in an approved area in such a manner that it will not erode. The points of inflow and outflow as well as the interior of the trap must be cleared of any accumulated debris and kept free of erosion. The embankments must continuously meet the requirements for Adequate Vegetative Establishment in accordance with Section B-4 Vegetative Stabilization. Any trees, brush, or other woody vegetation growing on the embankment or near the principal spillway must be removed. The line, grade, and cross section must be maintained. Water tight connections must be maintained for ST-I. **If the dry storage volume in a ST-I does not draw down within 10 hours, the geotextile around the perforated riser must be replaced.**

G-1-1 STANDARDS AND SPECIFICATIONS

FOR

PIPE OUTLET SEDIMENT TRAP ST-I

This practice consists of a trap formed by an embankment or excavation. The outlet for the trap is a perforated riser and a barrel pipe through the embankment. The barrel and riser are to be constructed of the same material, either smooth or corrugated, metal, HDPE, or PVC pipe. All pipes must be circular and all pipe connections watertight. The riser is wrapped with ¼ inch galvanized hardware cloth then wrapped with nonwoven geotextile and secured. The top of the riser has a trash rack/anti-vortex device.

Design Criteria

1. The maximum drainage area is 5 acres.

2. Use Tables G.1 and G.2 for pipe and trap sizing. An engineering design may preempt the use of Tables G.1 and G.2. Compute the runoff in accordance with NRCS TR-55 Urban Hydrology or the method outlined in Chapter 2 Estimating Runoff of the NRCS "Engineering Field Manual for Conservation Practices." Base runoff computations on worst soil cover conditions. Ensure that the capacity of the barrel and riser is sufficient to pass the peak rate of runoff from the 10-year frequency storm.

3. Refer to Section G-1 Sediment Traps for additional design criteria.

4. The top of the embankment must be at least 18 inches above the crest of the riser. The crest of the riser must be at least 1 foot above the top of the barrel.

5. Refer to Figures G.5 and G.6 for anti-seep collar design.

6. The trash rack/anti-vortex device must meet the requirements of Detail G-2-3 Concentric Trash Rack and Anti-Vortex Device.

7. The dry storage volume must be drawn-down either by perforating the riser between the wet and dry storage elevations or by using a vertical or horizontal draw-down device. Perforations must begin at the wet pool elevation and terminate at the riser crest. Because the riser may not be perforated within 6 inches of the barrel, a vertical or horizontal draw-down device may be necessary. Refer to Table G.10 and Details G-2-6 and G-2-7.

8. The riser must have a concrete or steel base with sufficient weight to prevent flotation of the riser. Concrete base must be twice the diameter of the riser, 18 inches thick, with the riser embedded 9 inches into the concrete base. Refer to Detail G-2-2. A steel base must at least twice the riser diameter, ¼ inch minimum thickness, attached to the bottom of the riser with a continuous weld to form a watertight connection, and covered with 2 feet of stone.

9. If non-erosive discharges cannot be achieved with the standard 10 foot outlet, design outlet protection in accordance with Section D-4 Outlet Protection. The pipe outlet sediment trap may be connected to a closed storm drain system.

Table G.1: Pipe Outlet Sediment Trap (ST-I) Design Criteria

Drainage Area (ac)	Total Volume (cf)	Wet Volume (cf)	Dry Volume (cf)	Minimum Depth (ft)	Minimum Bottom Length (ft)	Minimum Bottom Width (ft)
1	3600	1800	1800	2.5	46	23
2	7200	3600	3600	2.75	64	32
3	10800	5400	5400	3	76	38
4	14400	7200	7200	3.25	85	42
5	18000	9000	9000	3.5	92	45

Notes:

1. A length to width ratio of 2:1 or greater should be provided.
2. Side slopes must be 2:1 or flatter.
3. Minimum depth is from trap bottom to weir crest and includes both wet and dry storage.
4. As an alternative to this table, the storage volume and trap dimensions can be calculated using the "average area method."

Table G.2: Pipe Outlet Sediment Trap (ST-I) Diameter Selection

Drainage Area (ac)	Minimum Barrel Diameter (in)	Minimum Riser Diameter (in)	Minimum Trash Rack Diameter (in)	Minimum Height from Trap Bottom to Weir Crest (ft)	Minimum Embankment Height from Trap Bottom (ft)
1	15	21	30	2.5	4
2	21	27	42	2.75	4.25
3	24	33	48	3	4.5
4	27	36	54	3.25	4.75
5	30	42	60	3.5	5

Notes:

1. This table is to be used only under minimum tailwater conditions and inlet control.
2. An engineering design may be used as an alternative to this table.

DETAIL G-1-1 PIPE OUTLET SEDIMENT TRAP ST-I

STANDARD SYMBOL

ST–I

MAXIMUM DRAINAGE AREA = 5 ACRES

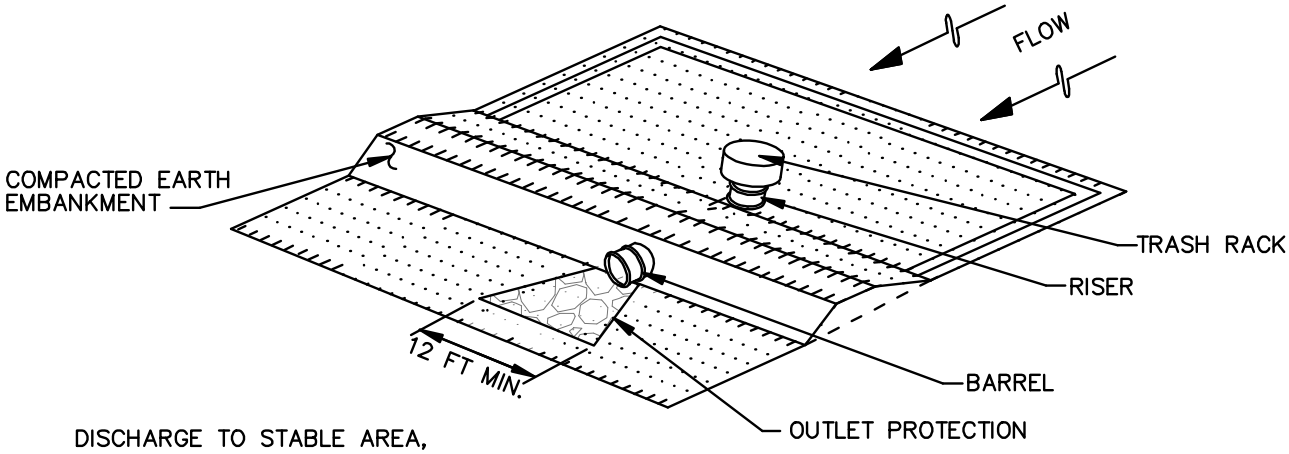

DISCHARGE TO STABLE AREA, STORM DRAIN SYSTEM, OR RECEIVING CHANNEL

ISOMETRIC VIEW

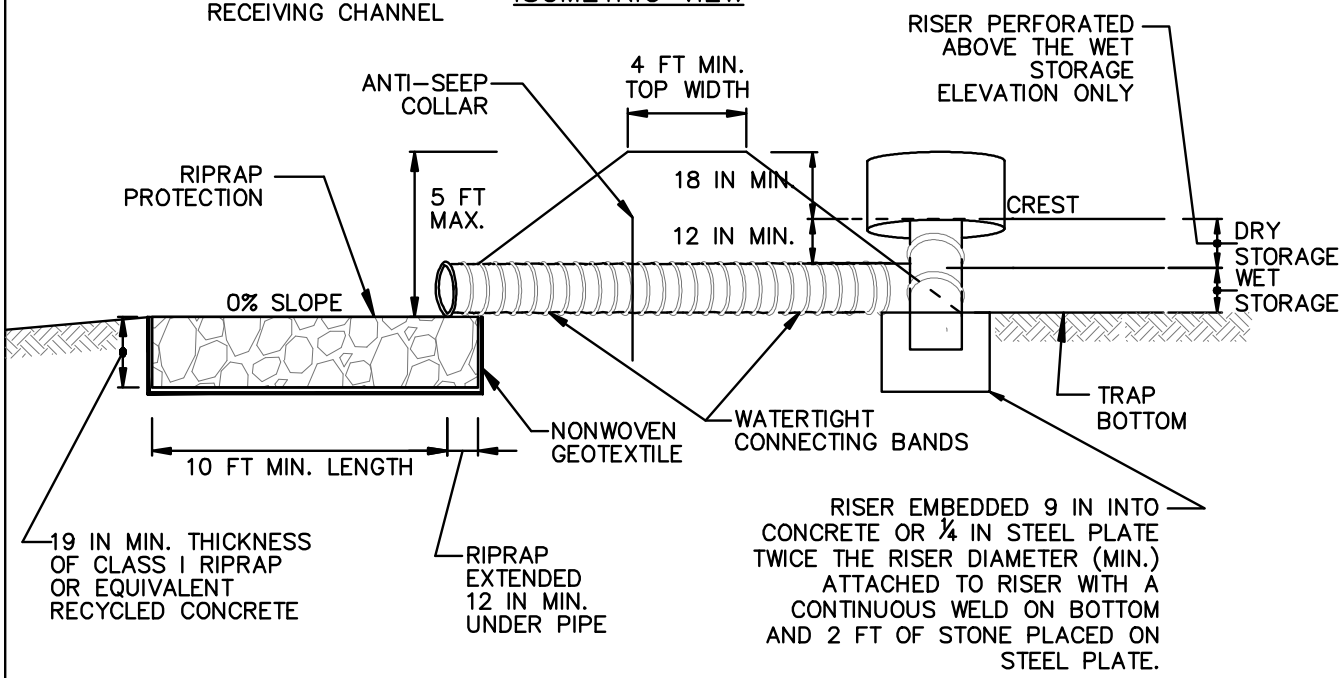

SECTION

¼ INCH GALVANIZED HARDWARE CLOTH WITH NONWOVEN GEOTEXTILE SECURELY FASTENED TO PERFORATED RISER

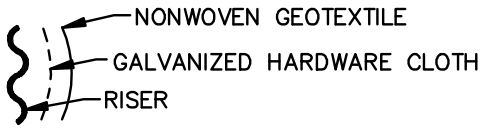

NOTE:
REFER TO DETAIL G–2–1 – TYPICAL ANTI–SEEP COLLARS
REFER TO DETAIL G–2–2 – RISER BASE
REFER TO DETAIL G–2–3 – CONCENTRIC TRASH RACK AND ANTI–VORTEX DEVICE

1 OF 3

DETAIL G-1-1 PIPE OUTLET SEDIMENT TRAP ST-I

STANDARD SYMBOL

ST–I

CONSTRUCTION SPECIFICATIONS

1. CONSTRUCT TRAP IN SUCH A MANNER THAT EROSION AND WATER POLLUTION ARE AVOIDED.
2. CLEAR, GRUB, AND STRIP ANY VEGETATION AND ROOT MAT FROM THE AREA UNDER THE EMBANKMENT AND TRAP BOTTOM.
3. PERFORATE THE RISER WITH 1 INCH DIAMETER HOLES SPACED 6 INCHES ON CENTER WITH THE LOWEST PERFORATIONS AT THE WET STORAGE ELEVATION OR PROVIDE A HORIZONTAL OR VERTICAL DRAW–DOWN DEVICE PERFORATED ACCORDING TO APPROVED PLAN. DO NOT PERFORATE THE RISER WITHIN 6 INCHES OF THE TOP OF THE HORIZONTAL BARREL.
4. SET RISER/BARREL ASSEMBLY PRIOR TO EMBANKMENT CONSTRUCTION. MAKE ALL PIPE CONNECTIONS WATERTIGHT. OFFSET RISER FROM EMBANKEMENT TO ACCOMODATE PLACEMENT OF THE TRASH RACK. ANCHOR THE RISER WITH EITHER A REINFORCED CONCRETE BASE OR STEEL PLATE BASE TO PREVENT FLOTATION. MAKE CONCRETE BASES AT LEAST TWICE THE RISER DIAMETER AND 18 INCHES THICK WITH THE RISER EMBEDDED 9 INCHES.
5. USE FILL MATERIAL FREE OF ROOTS, WOODY VEGETATION, OVERSIZED STONES, ROCKS, ORGANIC MATERIAL, OR OTHER OBJECTIONABLE MATERIAL FOR THE EMBANKMENT.
6. HAND COMPACT IN 4 INCH LAYERS FILL MATERIAL AROUND THE PIPE SPILLWAY. PLACE A MINIMUM OF 2 FEET OF HAND COMPACTED BACKFILL OVER THE PIPE SPILLWAY BEFORE CROSSING IT WITH CONSTRUCTION EQUIPMENT.
7. CONSTRUCT TOP OF EMBANKMENT 1 FOOT MINIMUM ABOVE RISER CREST. COMPACT THE EMBANKMENT BY TRAVERSING WITH EQUIPMENT WHILE IT IS BEING CONSTRUCTED.
8. MAKE ALL CUT AND FILL SLOPES 2:1 OR FLATTER.
9. WRAP THE RISER WITH ¼ INCH GALVANIZED HARDWARE CLOTH THEN WRAP WITH NONWOVEN GEOTEXTILE. DO NOT WRAP WITH MORE THAN ONE LAYER OF GEOTEXTILE. EXTEND HARDWARE CLOTH AND GEOTEXTILE AT LEAST 6 INCHES ABOVE THE HIGHEST PERFORATIONS AND AT LEAST 6 INCHES BELOW THE LOWEST PERFORATIONS. OVERLAP, FOLD AND FASTEN WHERE ENDS OF GEOTEXTILE COME TOGETHER TO PREVENT BYPASS. REPLACE GEOTEXTILE AS NECESSARY TO PREVENT CLOGGING.
10. USE STRAPS OR CONNECTING BANDS AT THE TOP AND BOTTOM OF THE GEOTEXTILE TO HOLD THE GEOTEXTILE AND HARDWARE CLOTH IN PLACE.
11. USE NONWOVEN GEOTEXTILE AS SPECIFIED IN SECTION H–1 MATERIALS.
12. STABILIZE THE EMBANKMENT AND INTERIOR SLOPES WITH SEED AND MULCH. STABILIZE POINTS OF CONCENTRATED INFLOW AS SHOWN ON APPROVED PLAN.
13. CONSTRUCT AND MAINTAIN THE OUTLET ACCORDING TO THE APPROVED PLAN AND IN SUCH A MANNER THAT EROSION AT OR BELOW THE OUTLET DOES NOT OCCUR.
14. REMOVE SEDIMENT AND RESTORE TRAP TO ORIGINAL DIMENSIONS WHEN SEDIMENT HAS ACCUMULATED TO CLEANOUT ELEVATION (50% OF WET STORAGE DEPTH). DEPOSIT REMOVED SEDIMENT IN AN APPROVED AREA AND IN SUCH A MANNER THAT IT WILL NOT ERODE. KEEP POINTS OF INFLOW AND OUTFLOW AS WELL AS INTERIOR OF THE TRAP FREE FROM EROSION, AND REMOVE ACCUMULATED DEBRIS. MAINTAIN EMBANKMENTS TO CONTINUOUSLY MEET REQUIREMENTS FOR ADEQUATE VEGETATIVE ESTABLISHMENT IN ACCORDANCE WITH SECTION B–4 VEGETATIVE STABILIZATION. REMOVE ANY TREES, BRUSH, OR OTHER WOODY VEGETATION GROWING ON EMBANKMENT OR NEAR PRINCIPAL SPILLWAY. MAINTAIN LINE, GRADE, AND CROSS SECTION. MAINTAIN WATER TIGHT CONNECTIONS. REPLACE GEOTEXTILE AROUND PERFORATED RISER IF DRY STORAGE VOLUME DOES NOT DRAW DOWN WITHIN 10 HOURS.
15. WHEN DEWATERING TRAP, PASS REMOVED WATER THROUGH AN APPROVED SEDIMENT CONTROL PRACTICE.
16. UPON REMOVAL, GRADE AND STABILIZE THE AREA OCCUPIED BY TRAP.

DETAIL G-1-1 PIPE OUTLET SEDIMENT TRAP ST-I

STANDARD SYMBOL

ST–I

PIPE OUTLET SEDIMENT TRAP ST–I, TRAP NO._____		
DRAINAGE AREA – INTIAL		ACRES
DRAINAGE AREA – INTERIM		ACRES
DRAINAGE AREA – FINAL		ACRES
TOTAL STORAGE REQUIRED		CF
TOTAL STORAGE PROVIDED		CF
WET STORAGE REQUIRED		CF
WET STORAGE PROVIDED		CF
DRY STORAGE REQUIRED		CF
DRY STORAGE PROVIDED		CF
TRAP BOTTOM ELEVATION		FT
TRAP BOTTOM DIMENSIONS		FT x FT
RISER CREST (DRY STORAGE) ELEVATION		FT
OUTLET (WET STORAGE) ELEVATION		FT
CLEANOUT ELEVATION		FT
TOP OF EMBANKMENT ELEVATION		FT
SIDE SLOPE		H:V RATIO
EMBANKMENT TOP WIDTH		FT
PRINCIPAL SPILLWAY MATERIAL (BARREL, RISER, ANTI–SEEP COLLAR)		
RISER DIAMETER		IN
BARREL DIAMETER		IN
TRASH RACK DIAMETER		IN
TRASH RACK HEIGHT		IN
ANTI–SEEP COLLAR DIMENSIONS		FT
OUTLET PROTECTION – LENGTH		FT
OUTLET PROTECTION – WIDTH		FT
OUTLET PROTECTION – DEPTH		IN

3 OF 3

G-1-2 STANDARDS AND SPECIFICATIONS

FOR

STONE/RIPRAP OUTLET SEDIMENT TRAP ST-II

This practice consists of a trap formed by an excavation and an embankment with a partially excavated outlet lined with riprap and containing a stone weir. The minimum length of the weir (in feet) is equal to four times the drainage area (in acres). The weir crest is level and at least 1 foot below top of embankment and no more than 3 feet above existing ground beneath the outlet. The weir is constructed of 4 to 7 inch stone and the outlet of Class I riprap. A one foot thick layer of ¾ to 1½ inch washed aggregate is placed on the upstream face of the outlet.

Design Criteria

1. The maximum drainage area is 10 acres.

2. The required total storage volume is calculated from the weir crest. For storage requirements see Table G.3.

3. See Section G-1 Sediment Traps for additional design criteria.

4. If non-erosive discharges cannot be achieved with the standard 10 foot outlet, design outlet protection in accordance with Section D-4 Outlet Protection.

5. The weir length (in feet) must be equal to, or greater than, four times the drainage area (in acres).

6. The weir crest must be at least one foot below the top of the embankment and no more than 3 feet above existing ground (beneath the outlet).

Table G.3: Stone/Riprap Outlet Sediment Trap Design Criteria (ST-II)

Drainage Area (ac)	Total Volume (cf)	Wet Volume (cf)	Dry Volume (cf)	Minimum Depth (ft)	Minimum Bottom Length (ft)	Minimum Bottom Width (ft)
1	3600	1800	1800	2.5	46	23
2	7200	3600	3600	2.5	68	34
3	10800	5400	5400	2.5	86	42
4	14400	7200	7200	3.0	90	43
5	18000	9000	9000	3.0	101	50
6	21600	10800	10800	4.0	90	46
7	25200	12600	12600	4.0	100	50
8	28800	14400	14400	4.0	105	55
9	32400	16200	16200	4.0	110	60
10	36000	18000	18000	4.0	123	60

Notes:

1. Preferably, provide a length to width ratio of 2:1 or greater.
2. Side slopes must be 2:1 or flatter.
3. Minimum depth is from trap bottom to weir crest and includes both wet and dry storage.
4. Table is based on minimum weir length equal to 4 times the drainage area.
5. As an alternative to this table, the storage volume and trap dimensions can be calculated using the "average area method."

DETAIL G-1-2 STONE/RIPRAP OUTLET SEDIMENT TRAP ST-II

STANDARD SYMBOL

ST–II

MAXIMUM DRAINAGE AREA = 10 ACRES

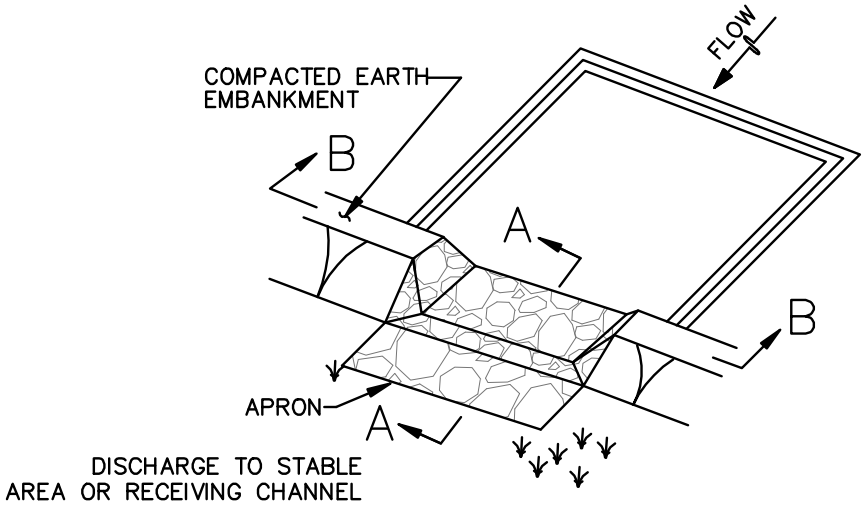

ISOMETRIC VIEW

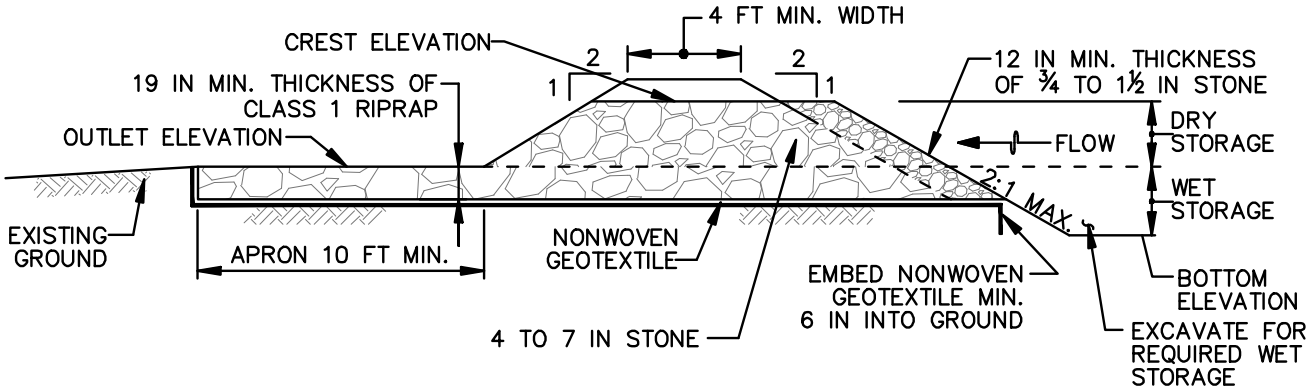

SECTION A–A

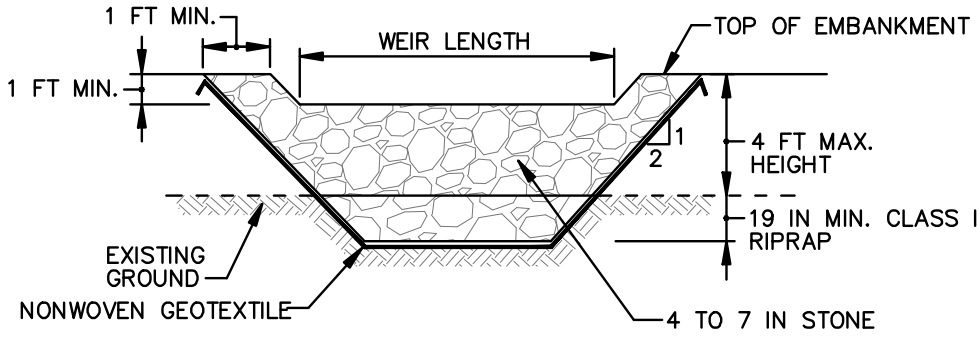

SECTION B–B

1 OF 3

MARYLAND STANDARDS AND SPECIFICATIONS FOR SOIL EROSION AND SEDIMENT CONTROL

U.S. DEPARTMENT OF AGRICULTURE NATURAL RESOURCES CONSERVATION SERVICE	2011	MARYLAND DEPARTMENT OF ENVIRONMENT WATER MANAGEMENT ADMINISTRATION

DETAIL G-1-2 STONE/RIPRAP OUTLET SEDIMENT TRAP ST-II

STANDARD SYMBOL

ST–II

CONSTRUCTION SPECIFICATIONS

1. CONSTRUCT TRAP IN SUCH A MANNER THAT EROSION AND WATER POLLUTION ARE AVOIDED.
2. CLEAR, GRUB, AND STRIP ANY VEGETATION AND ROOT MAT FROM THE AREA UNDER THE EMBANKMENT AND TRAP BOTTOM.
3. USE FILL MATERIAL FREE OF ROOTS, WOODY VEGETATION, OVERSIZED STONES, ROCKS, ORGANIC MATERIAL, OR OTHER OBJECTIONABLE MATERIAL FOR THE EMBANKMENT.
4. CONSTRUCT TOP OF EMBANKMENT 1 FOOT MINIMUM ABOVE WEIR CREST. COMPACT THE EMBANKMENT BY TRAVERSING WITH EQUIPMENT WHILE IT IS BEING CONSTRUCTED.
5. MAKE ALL CUT AND FILL SLOPES 2:1 OR FLATTER.
6. PLACE NONWOVEN GEOTEXTILE, AS SPECIFIED IN SECTION H–1 MATERIALS, OVER THE BOTTOM AND SIDES OF OUTLET AND APRON PRIOR TO PLACEMENT OF RIPRAP. OVERLAP SECTIONS OF GEOTEXTILE AT LEAST 1 FOOT WITH THE SECTION NEARER TO THE TRAP PLACED ON TOP. EMBED GEOTEXTILE AT LEAST 6 INCHES INTO EXISTING GROUND AT ENTRANCE OF OUTLET CHANNEL.
7. USE CLEAN 4 TO 7 INCH RIPRAP TO CONSTRUCT THE WEIR. USE CLASS I RIPRAP FOR THE APRON. USE OF RECYCLED CONCRETE EQUIVALENT IS ACCEPTABLE.
8. PLACE 1 FOOT OF CLEAN ¾ TO 1½ INCH STONE OR EQUIVALENT RECYCLED CONCRETE ON THE UPSTREAM FACE OF THE WEIR.
9. CONSTRUCT AND MAINTAIN THE OUTLET ACCORDING TO APPROVED PLAN, AND IN SUCH A MANNER THAT EROSION AT OR BELOW THE OUTLET DOES NOT OCCUR.
10. STABILIZE THE EMBANKMENT AND INTERIOR SLOPES WITH SEED AND MULCH. STABILIZE POINTS OF CONCENTRATED INFLOW AS SHOWN ON APPROVED PLAN.
11. REMOVE SEDIMENT AND RESTORE TRAP TO ORIGINAL DIMENSIONS WHEN SEDIMENT HAS ACCUMULATED TO CLEANOUT ELEVATION (50% OF WET STORAGE DEPTH). DEPOSIT REMOVED SEDIMENT IN AN APPROVED AREA AND IN SUCH A MANNER THAT IT WILL NOT ERODE. KEEP POINTS OF INFLOW AND OUTFLOW AS WELL AS INTERIOR OF THE TRAP FREE FROM EROSION, AND REMOVE ACCUMULATED DEBRIS. MAINTAIN EMBANKMENTS TO CONTINUOUSLY MEET REQUIREMENTS FOR ADEQUATE VEGETATIVE ESTABLISHMENT IN ACCORDANCE WITH SECTION B–4 VEGETATIVE STABILIZATION. REMOVE ANY TREES, BRUSH, OR OTHER WOODY VEGETATION GROWING ON EMBANKMENT OR NEAR PRINCIPAL SPILLWAY. MAINTAIN LINE, GRADE, AND CROSS SECTION.
12. WHEN DEWATERING TRAP, PASS REMOVED WATER THROUGH AN APPROVED SEDIMENT CONTROL PRACTICE.
13. UPON REMOVAL, GRADE AND STABILIZE THE AREA OCCUPIED BY TRAP.

DETAIL G-1-2 STONE/RIPRAP OUTLET SEDIMENT TRAP ST-II

STANDARD SYMBOL

ST–II

STONE/RIPRAP OUTLET SEDIMENT TRAP ST–II, TRAP NO. _____		
DRAINAGE AREA – INITIAL		ACRES
DRAINAGE AREA – INTERIM		ACRES
DRAINAGE AREA – FINAL		ACRES
TOTAL STORAGE REQUIRED		CF
TOTAL STORAGE PROVIDED		CF
WET STORAGE REQUIRED		CF
WET STORAGE PROVIDED		CF
DRY STORAGE REQUIRED		CF
DRY STORAGE PROVIDED		CF
EXISTING GROUND ELEVATION AT OUTLET (WET STORAGE ELEVATION)		FT
TRAP BOTTOM ELEVATION		FT
TRAP BOTTOM DIMENSIONS		FT x FT
WEIR LENGTH		FT
WEIR CREST (DRY STORAGE) ELEVATION		FT
CLEANOUT ELEVATION		FT
TOP OF EMBANKMENT ELEVATION		FT
SIDE SLOPE		H:V RATIO
EMBANKMENT TOP WIDTH		FT
OUTLET PROTECTION – LENGTH		FT
OUTLET PROTECTION – DEPTH		IN

G-1-3 STANDARDS AND SPECIFICATIONS

FOR

RIPRAP OUTLET SEDIMENT TRAP ST-III

This practice consists of a trap formed by an excavation and an embankment with a partially excavated outlet lined with riprap. Due to the configuration of the outfall, the required storage volume is all wet and equal to 5400 cubic feet per acre of drainage area.

Design Criteria

1. The maximum drainage area is 10 acres.

2. See Tables G.4 and G.5 for outlet and trap sizing.

3. The storage volume is calculated from the outlet invert.

4. See Section G-1 Sediment Traps for additional design criteria.

5. If non-erosive discharges cannot be achieved with the standard 10 foot outlet, design outlet protection in accordance with Section D-4 Outlet Protection.

Table G.4: Riprap Outlet Sediment Trap (ST-III) Outlet Dimensions

Contributing Drainage Area (ac)	Depth of Outlet (a) (ft)	Bottom Width of Outlet (b) (ft)
1	1.5	4.0
2	1.5	5.0
3	1.5	6.0
4	1.5	10.0
5	1.5	12.0
6	1.5	14.0
7	1.5	16.0
8	2.0	10.0
9	2.0	11.0
10	2.0	12.0

Table G.5: Riprap Outlet Sediment Trap (ST-III) Design Criteria

Drainage Area (ac)	Total Volume (cf)	Minimum Storage Depth (ft)	Minimum Bottom Length (ft)	Minimum Bottom Width (ft)
1	5400	3.0	68	34
2	10800	3.0	102	51
3	16200	3.5	116	58
4	21600	3.5	136	68
5	27000	4.0	141	70
6	32400	4.5	156	78
7	37800	4.5	157	78
8	43200	4.5	169	85
9	48600	5.0	168	84
10	54000	5.0	178	89

Notes:

1. Preferably, provide a length to width ratio of 2:1 or greater.
2. Side slopes must be 2:1 or flatter.
3. As an alternative to this table, the storage volume and trap dimensions can be calculated using the "average area method."

DETAIL G-1-3 RIPRAP OUTLET SEDIMENT TRAP ST-III

STANDARD SYMBOL

ST–III

MAXIMUM DRAINAGE AREA = 10 ACRES

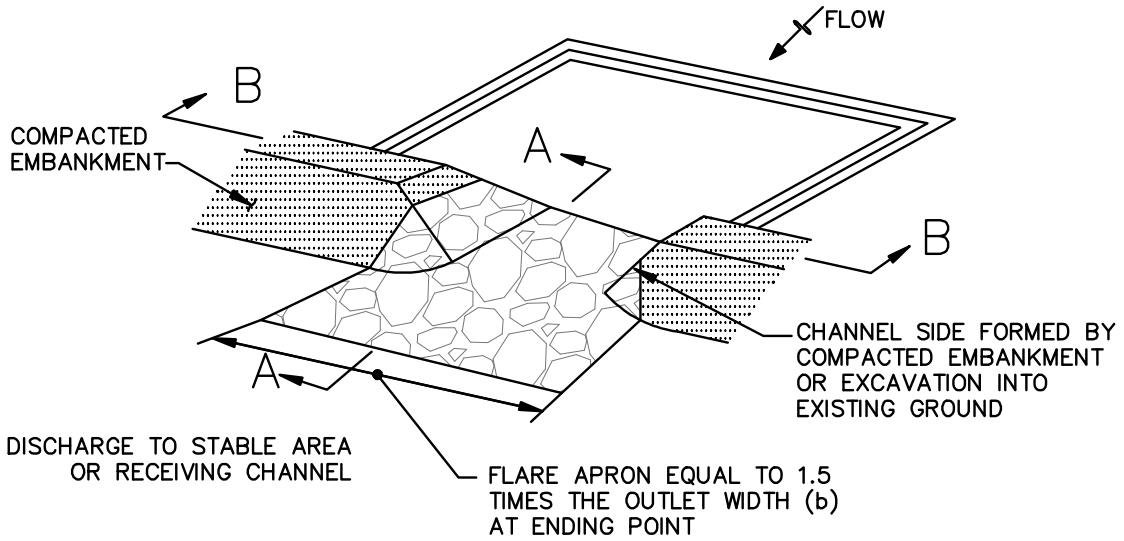

ISOMETRIC VIEW

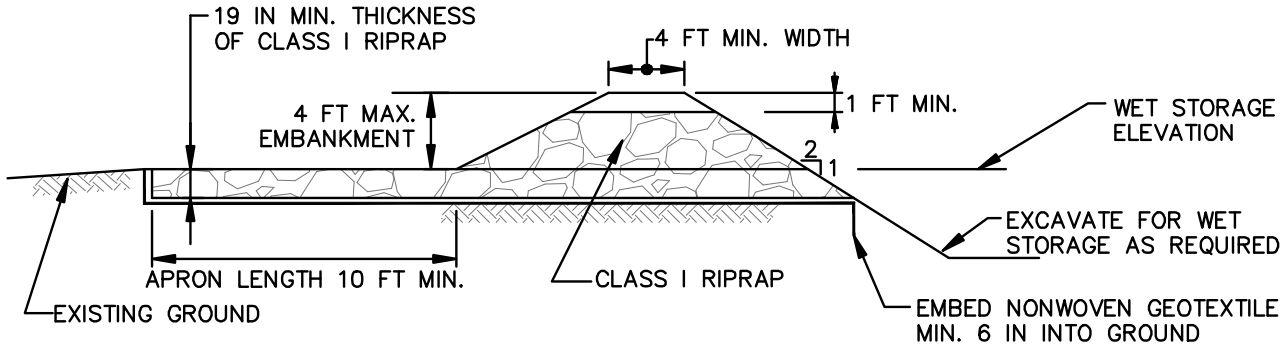

SECTION A–A

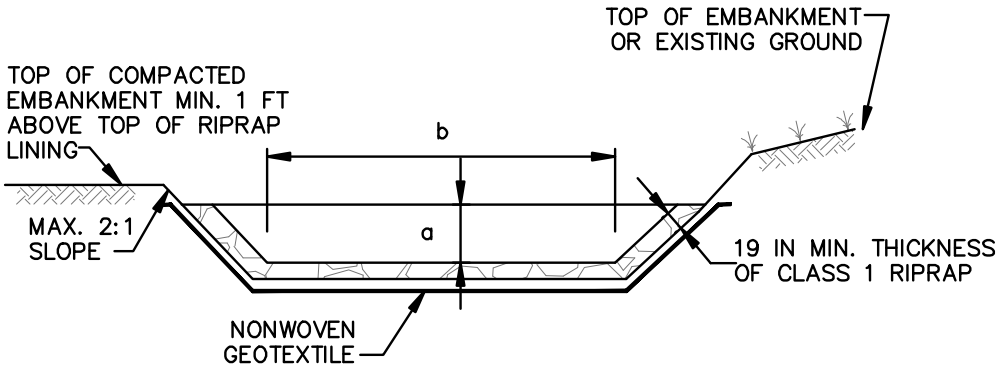

a – DEPTH OF OUTLET

b – BOTTOM WIDTH OF OUTLET

SECTION B–B

1 OF 3

MARYLAND STANDARDS AND SPECIFICATIONS FOR SOIL EROSION AND SEDIMENT CONTROL

U.S. DEPARTMENT OF AGRICULTURE NATURAL RESOURCES CONSERVATION SERVICE	2011	MARYLAND DEPARTMENT OF ENVIRONMENT WATER MANAGEMENT ADMINISTRATION

DETAIL G-1-3 RIPRAP OUTLET SEDIMENT TRAP ST-III

STANDARD SYMBOL

ST–III

CONSTRUCTION SPECIFICATIONS

1. CONSTRUCT TRAP IN SUCH A MANNER THAT EROSION AND WATER POLLUTION ARE AVOIDED.
2. CLEAR, GRUB, AND STRIP ANY VEGETATION AND ROOT MAT FROM THE AREA UNDER THE EMBANKMENT AND TRAP BOTTOM.
3. USE FILL MATERIAL FREE OF ROOTS, WOODY VEGETATION, OVERSIZED STONES, ROCKS, ORGANIC MATERIAL, OR OTHER OBJECTIONABLE MATERIAL FOR THE EMBANKMENT.
4. CONSTRUCT TOP OF EMBANKMENT 1 FOOT MINIMUM ABOVE TOP OF RIPRAP OUTLET. COMPACT THE EMBANKMENT BY TRAVERSING WITH EQUIPMENT WHILE IT IS BEING CONSTRUCTED.
5. MAKE ALL CUT AND FILL SLOPES 2:1 OR FLATTER.
6. PLACE NONWOVEN GEOTEXTILE, AS SPECIFIED IN SECTION H–1 MATERIALS, OVER THE BOTTOM AND SIDES OF OUTLET AND APRON PRIOR TO PLACEMENT OF RIPRAP. OVERLAP SECTIONS OF GEOTEXTILE AT LEAST 1 FOOT WITH THE SECTION NEARER TO THE TRAP PLACED ON TOP. EMBED GEOTEXTILE AT LEAST 6 INCHES INTO EXISTING GROUND AT ENTRANCE OF OUTLET CHANNEL.
7. USE CLEAN CLASS 1 RIPRAP PLACED 19 INCHES IN DEPTH FOR THE OUTLET AND APRON. USE OF RECYCLED CONCRETE EQUIVALENT IS ACCEPTABLE.
8. CONSTRUCT AND MAINTAIN THE OUTLET ACCORDING TO APPROVED PLAN, AND IN SUCH A MANNER THAT EROSION AT OR BELOW THE OUTLET DOES NOT OCCUR.
9. STABILIZE THE EMBANKMENT AND INTERIOR SLOPES WITH SEED AND MULCH. STABILIZE POINTS OF CONCENTRATED INFLOW AS SHOWN ON APPROVED PLAN.
10. REMOVE SEDIMENT AND RESTORE TRAP TO ORIGINAL DIMENSIONS WHEN SEDIMENT HAS ACCUMULATED TO CLEANOUT ELEVATION (25% OF WET STORAGE DEPTH). DEPOSIT REMOVED SEDIMENT IN AN APPROVED AREA AND IN SUCH A MANNER THAT IT WILL NOT ERODE. KEEP POINTS OF INFLOW AND OUTFLOW AS WELL AS INTERIOR OF THE TRAP FREE FROM EROSION AND REMOVE ACCUMULATED DEBRIS. MAINTAIN EMBANKMENTS TO CONTINUOUSLY MEET REQUIREMENTS FOR ADEQUATE VEGETATIVE ESTABLISHMENT IN ACCORDANCE WITH SECTION B–4 VEGETATIVE STABILIZATION. REMOVE ANY TREES, BRUSH, OR OTHER WOODY VEGETATION GROWING ON EMBANKMENT OR NEAR PRINCIPAL SPILLWAY. MAINTAIN LINE, GRADE, AND CROSS SECTION.
11. WHEN DEWATERING TRAP, PASS THE REMOVED WATER THROUGH AN APPROVED SEDIMENT CONTROL PRACTICE.
12. UPON REMOVAL, GRADE AND STABILIZE THE AREA OCCUPIED BY TRAP.

DETAIL G-1-3 RIPRAP OUTLET SEDIMENT TRAP ST-III

STANDARD SYMBOL

ST–III

RIPRAP OUTLET SEDIMENT TRAP ST–III, TRAP NO. _____		
DRAINAGE AREA – INITIAL		ACRES
DRAINAGE AREA – INTERIM		ACRES
DRAINAGE AREA – FINAL		ACRES
WET STORAGE REQUIRED		CF
WET STORAGE PROVIDED		CF
EXISTING GROUND ELEVATION AT OUTLET (WET STORAGE ELEVATION)		FT
TRAP BOTTOM ELEVATION		FT
TRAP BOTTOM DIMENSIONS		FT x FT
DEPTH OF OUTLET (a)		FT
BOTTOM WIDTH OF OUTLET (b)		FT
CLEANOUT ELEVATION		FT
TOP OF EMBANKMENT HEIGHT ELEVATION		FT
SIDE SLOPE		H:V RATIO
EMBANKMENT TOP WIDTH		FT
OUTLET PROTECTION – LENGTH		FT
OUTLET PROTECTION – DEPTH		IN

G-2 STANDARD AND SPECIFICATIONS

FOR

SEDIMENT BASINS

Definition

A temporary pond formed by excavation and/or construction of an embankment and equipped with a draw-down device.

Purpose

To intercept sediment-laden runoff and retain sediment in order to protect drainage ways, properties, and rights-of-way downstream of the sediment basin from sedimentation.

Conditions Where Practice Applies

A sediment basin is required where sediment trap drainage areas are exceeded. Stormwater management ponds may be used as sediment basins provided they meet the requirements of this section and that the construction sequence addresses converting the sediment basin to the permanent stormwater management pond.

Conditions of Use

This standard applies to the installation of temporary sediment basins on sites where:

1. Failure of the structure would not result in loss of life, damage to homes or buildings, or interruption of use or service of public roads or utilities;

2. The drainage area does not exceed 100 acres;

3. The maximum embankment height does not exceed 15 feet measured from the natural ground to the embankment top along the centerline of embankment; and

4. The basin is to be removed within 36 months after the beginning of construction of the basin.

Where any of these criteria cannot be met, the structure must be designed in accordance with Environmental Article, Title 5, Subtitle 5, Annotated Code of Maryland or Natural Resource Conservation Service (NRCS) Maryland Conservation Practice Standard Code No. 378 for Ponds.

Design Criteria

1. Local Requirements. In addition to the requirements herein, the design and construction must comply with local laws, ordinances, rules and regulations.

2. Stormwater Management. Where a sediment basin is to be used as a permanent pond, the total volume must be equal to or exceed the capacity requirements for the permanent pond or provisions must be made for additional grading when the facility is converted to a permanent structure.

3. Location. Locate the basin to obtain the maximum storage benefit from the terrain and for ease of cleanout. The basin should be located to avoid conflicts with utilities and construction activities. Where possible, locate so that storm drains may outfall or be diverted into the basin. Do not locate

basin any closer than 20 feet from an existing building foundation. Basins should not be located in areas where the groundwater elevation is higher than the bottom of the basin. Basins in structural fill areas (e.g., proposed roadways and building foundations) are discouraged.

4. Storage Volume. Provide at least 3600 cubic feet of storage for each acre of drainage. The volume is measured from the bottom of the basin to the elevation of the principal spillway crest and is to be divided equally into "dry" storage (1800 ft^3/acre) and "wet" storage (1800 ft^3/acre). The dry storage will draw down to the wet pool elevation. The 3600 cubic feet of storage is approximately equal to 1 inch of runoff per acre of drainage area.

5. Clean Out. The clean out elevation is one-half the wet storage depth. Determine and state the elevation corresponding to the maximum allowable sediment level in the design data on the plans as a distance below the top of the riser.

6. Surface Area. The ratio of surface area (acres) to discharge (cubic feet/second) must be greater than or equal to 0.0035. The surface area is measured at the design high water elevation for the 10-year frequency storm.

7. Inflow.

   a. Establish points of concentrated inflow and specify the type of inflow protection. See Section D - Erosion Control.

   b. Locate inflow points to maximize the flow distance to the outlet. Length to width ratio must be 2:1 or greater, where length is the distance between the inlet and outlet. Where a 2:1 effective length to width ratio between inflow and outflow cannot be obtained, baffles are required. See Detail G-2-4 Baffle Boards.

   c. Provide dikes/berms where necessary to ensure that runoff is directed to the protected inflow points of the basin. The top elevation of any dike or berm directing water to a sediment basin must be equal to, or higher than, the elevation of the basin embankment.

   d. Specify in the sequence of construction that the basin must be constructed prior to the water conveyances.

8. Drawings. Contours for basin grading must be shown on the plan. A profile and cross-section of the spillway(s) and details for all appurtenances must be provided. Include bottom, wet storage, dry storage, and cleanout elevations; dimensions of outlet protection; and embankment width and elevation.

9. Cut-Off Trench. Provide for a cut-off trench along the centerline of the proposed embankment, a minimum depth of 4 feet and a bottom width (minimum 4 feet) wide enough to permit operation of excavation and compaction equipment. The cut-off trench must be excavated with side slopes 1:1 or flatter and be continuous for the entire length of proposed embankment.

10. Impervious Core. Provide an impervious core with a minimum top width of 4 feet along the centerline of the proposed embankment. Impervious core must be continuous throughout the embankment and must extend upwards with 1:1 side slopes the from the cut-off trench up to the 10-year water surface elevation.

11. Embankment. Elevations of the top of earth fill at constructed and settled height of the embankment must be shown on the profile. The top of the dam embankment is to be level. The top width must be a minimum of 8 feet for embankments up to 10 feet in height. For embankments

between 10 feet and 15 feet in height, the minimum top width is 10 feet. The combined upstream and downstream side slopes of the embankment must have a combined total of five horizontal to one vertical (5:1) minimum with neither slope steeper than two horizontal to one vertical (2:1).

12. Hydrologic Analysis. Compute the runoff in accordance with NRCS TR-55 Urban Hydrology or the method outlined in Chapter 2 Estimating Runoff of the NRCS "Engineering Field Manual for Conservation Practices." Base runoff computations on “worst soil cover” conditions. Ensure that the combined capacities of the principal and emergency spillways are sufficient to pass the "routed" peak rate of runoff from the 10-year frequency storm. The start elevation for routing must correspond to the wet pool elevation (i.e. wet storage volume must not be included in the analysis).

13. Draw-Down Device. The dry storage volume is to be dewatered to the wet pool elevation over a 10 hour period. This can be done by constructing a perforated horizontal or vertical draw-down device with an orifice to control discharge. Use the chart or equations in Table G.10 to determine the appropriate orifice size. Design the pipe perforations so that the total area of the perforations is equal to or greater than 4 times the area of the control orifice. Alternate draw-down methods may be designed as allowed by the appropriate approval authority.

14. Outlet. Locate basin to discharge onto stable ground, stable channel, or into a storm drain system. Discharge to a buffer may be required. Provide an outlet that conveys the discharge in a non-erosive manner to a stable area. Protect against scour at the discharge end of the pipe spillway in accordance with the Section D-4 Outlet Protection.

15. Drainage Easements. Where discharge occurs at the property line, comply with local ordinances and drainage easement requirements**.** Show adequate notes and references concerning the easements on the erosion and sediment control plan.

16. Emergency Spillway. An emergency spillway is required when the principal spillway is not designed to pass the 10-year frequency storm. The entire flow area of the emergency spillway must be in existing ground (not fill). The control section is to be trapezoidal with a minimum bottom width of eight feet and have a straight, level length of at least 25 feet. The outlet section should have sufficient slope such that the discharge capacity of the spillway is not restricted and allows the discharge to be released at a non-erosive velocity.

    a. The minimum capacity of the emergency spillway must pass the peak rate of runoff from the 10-year frequency storm, less any reduction due to flow in the principal spillway. Determine the emergency spillway dimensions by using Figure G.3 Emergency Spillway Design and Table G.9 or Figure G.4.

    b. The velocity of flow in the exit channel must not exceed 5 feet per second for vegetated channels. For channels with erosion protection other than vegetation, ensure velocities are within the non-erosive range for the type of protection used.

    c. Freeboard (elevation difference between the 10-year storm water surface in the emergency spillway and the top of the settled embankment) must be at least a minimum of one (1) foot. Where no emergency spillway is provided, design the freeboard to a minimum of two (2) feet.

    d. The principal spillway crest elevation must be a minimum of one (1) foot below the elevation of the control section of the emergency spillway.

17. Principal Spillway. Provide a principal spillway which consists of a vertical pipe or concrete box (riser) joined to a pipe (barrel) that extends through the embankment and discharges beyond the

downstream toe of the fill.

18. Riser and Barrel Assembly.

    a. The barrel must pass at least 10 percent of the 10-year, 24-hour frequency storm and be at least 10 inches in diameter. If the principal spillway is designed to pass the entire 10-year storm, then the barrel must have a minimum cross-sectional area of three (3) square feet.

    b. The design of the barrel should be based on Table G.7, Table G.8, or hydraulic calculations. For plastic pipe, Table G.7 can be used for corrugated lined pipe and Table G.8 for smooth lined pipe. Use manufacturer specification for loading.

    c. Pipe material must conform to NRCS Maryland Conservation Practice Standard Code No. 378 for Ponds.

    d. An anti-vortex device and trash rack are required for all risers. For corrugated metal pipe risers, meet the specifications in Detail G-2-3 Concentric Trash Rack and Anti-Vortex Device. For other types of risers, refer to NRCS Maryland Conservation Practice Standard Code No. 378 for Ponds.

    e. The riser must include a base of sufficient weight to prevent flotation of the riser. Concrete riser bases must be at least twice the diameter of the riser, a minimum of 18 inches thick, and contain steel reinforcement as shown in Detail G-2-2 Corrugated Riser Base. The riser needs to be embedded 9 inch minimum into the base. Anti-flotation calculations must be provided for risers over 10 feet in height, based on the following:

        i. Analyze the riser for flotation, assuming all orifices and pipes are plugged.
        ii. Provide a factor of safety of 1.2 or greater. (Downward forces $\geq$ 1.2 x upward forces.)

    f. Precast concrete structures must include details for a projection collar. If the riser contains multiple sections, provide a mechanical connection at each joint as shown on Detail G-2-8 Precast Riser Connector to prevent joint separation which may be caused by differential earth pressures in the embankment.

    g. To prevent piping along the barrel, include a filter diaphragm or anti-seep collars around the barrel. Anti-seep collars may not be acceptable on permanent structures. For filter diaphragm design refer to NRCS Part 628 Dams, National Engineering Handbook, Chapter 45. Anti-seep collars are to be designed according to Figures G.5 and G.6.

19. Removal of Basin.

    a. Specify on the plan the type(s) of dewatering device(s) to be used in accordance with Section F - Dewatering.

    b. The location and disposal method(s) for sediment removed from a basin must be shown on the plans. Do not deposit the sediment downstream from the basin or adjacent to a drainage way or floodplain. Off-site disposal sites must be covered by an approved erosion and sediment control plan.

    c. Silt fence or other sediment control practices may be required during basin installation and removal.

    d. Upon removal, the wet soil around the basin must also be removed to facilitate compaction.

Maintenance

Sediment and debris must be removed and the basin restored to its original dimensions when sediment accumulates to the cleanout elevation (50% of the wet storage depth). Removed sediment must be deposited in an approved area in such a manner that it will not erode. The points of inflow and outflow as well as the interior of the basin must be cleared of any accumulated debris and kept free of erosion. The embankments must continuously meet the requirements for Adequate Vegetative Establishment in accordance with Section B-4 Vegetative Stabilization. Any trees, brush, or other woody vegetation growing on the embankment or near the principal spillway must be removed. The line, grade, and cross section must be maintained. Water tight connections must be maintained. **If the dry storage volume does not drain within 10 hours, the geotextile around the draw-down device must be replaced.**

BASIN DATA REQUIRED ON EROSION AND SEDIMENT CONTROL PLAN

Show on the plan all the information necessary to properly construct and maintain the basin, including type and location of inflow protection. Additionally, the plan must show the controls necessary for the installation of the basin. At a minimum provide the following information for each basin:

1. Basin number(s).

2. Plan view of the basin and emergency spillway showing existing and proposed contours.

3. Drainage area acreage (initial, interim, final).

4. Storage computations:

   a. Total volume required including volumes of "wet" and "dry" storage.

   b. Total volume provided including volumes of "wet" and "dry" storage.

   c. Level of sediment at which cleanout shall be required, stated as a distance from the riser crest to the sediment surface.

5. Cross-section of embankment including constructed and settled top elevations, side slopes, cutoff trench dimensions, and profile of the principal spillway.

6. Principal spillway information: riser and barrel diameters and material, inverts, orifices, trash rack, weir elevations, projection collar, filter diaphragm or anti-seep collar size and spacing, and other relevant information.

7. Maintenance equipment access points.

8. Dewatering method (removable pumping station, etc.).

9. Drawdown device information.

10. Inflow and outlet protection dimensions.

11. Profile and cross-section of the emergency spillway.

12. Details of pipe connections, riser base, seepage control (e.g. filter diaphragm or anti-seep collars), trash rack, cleanout elevation, and anti-vortex device.

13. Drainage area map clearly showing the maximum contributory drainage area to the basin.

14. Construction Specifications (refer to following page).

15. Other information as required by the approval agency.

NOTE: A Temporary Sediment Basin Design Data Sheet (Table G.6) must be submitted for each sediment basin.

CONSTRUCTION SPECIFICATIONS

1. Install sediment control practices necessary to construct basin. Clear and grub to remove trees, vegetation, roots or other objectionable material from the areas where the embankment is to be placed. Do not clear the pool area until completion of the embankment; unless the pool area is to be used for borrow. Salvage topsoil for later use.

2. Excavate cut-off trench along centerline of proposed embankment a minimum depth of 4 feet and a bottom (min. 4 feet) wide enough to permit operation of excavation and compaction equipment. Construct side slopes 1:1 or flatter. Cut-off trench must be continuous and extend the entire length of embankment. Compaction requirements are the same as those for the embankment. Dewater the trench during the backfilling compaction operations, using an approved practice.

3. Construct embankment of clean soil free of roots, woody vegetation, oversized stones, rocks, or other objectionable material. Fill material for impervious core and cut-off trench must conform to Unified Soil Classification GC, SC, CH, or CL and must have at least 30 percent passing the #200 sieve. Use fill material containing sufficient moisture so that the soil can be formed by hand into a ball without crumbling. If water can be squeezed out of the ball, it is too wet for proper compaction. Place fill material in six-inch to eight inch thick continuous lifts over the entire length of the fill. Obtain compaction by passing construction equipment or compactor over the fill, so that the entire surface of each layer of fill is traversed at least four times. Construct the embankment to an elevation a minimum of 10 percent higher than the design height to allow for settlement.

4. Install principal spillway prior to, or concurrently with, fill placement. **Do not excavate embankment for placement of spillway.** All pipe connections, including anti-seep collars must be completely watertight. Install filter diaphragm when specified on plan. Barrel connection to riser must be welded all around when the pipe and riser are metal. Attach barrel stub to riser at the same percent (slope) of grade as the barrel. For concrete riser/barrel assembly, pour riser with barrel in place or set pre-cast riser and install projection collar for watertight connection. Place fill material around the pipe spillway in four (4) inch lifts and hand compact around the pipe to a depth of 1.5 times the pipe diameter (minimum). Securely install anti-vortex device and trash rack as shown on plan.

5. **Install the emergency spillway in undisturbed natural ground.** Construct spillway within a tolerance of $\pm$ 0.2 feet.

6. Stabilize embankment and associated disturbed areas within three (3) days of completion with seed and mulch. Monitor embankment and maintain erosion free during the life of the basin.

7. Install fencing and signage in accordance with the approved plan.

8. Remove sediment when accumulated material has reached 25 percent of the total storage depth. Restore basin to original design volume. Place removed sediments in a controlled area and stabilize. Do not deposit sediment downstream of the embankment, adjacent to a stream or floodplain.

9. When the contributing drainage area is stable, the basin can be removed in accordance with the approved sediment control plan.

10. A sediment basin designed, built, and certified as a stormwater management structure, may be converted when the contributory drainage area is stable. Properly dewater basin, modify outlet structure, perform additional grading, and provide required storage volume in accordance with approved stormwater management plans.

Table G.6: Temporary Sediment Basin Design Data Sheet
(Refer to instructions on pages G.27 through G.29)

Computed by:_____Date:_____Checked by:____Date:_____
Project name:_____Basin #:_____
Location:_____
_____

Design Volumes and Elevations

1. Total area draining to basin = _____ acres (ac)
2. Required total storage volume = 3600 ft^3/ac x _____ acre drainage area = _____ ft^3
3. Required wet storage volume = 1800 ft^3/ac x _____ acre drainage area = _____ ft^3
4. Required dry storage volume = 1800 ft^3/ac x _____ acre drainage area = _____ ft^3
5. Basin bottom elevation = _____ft
6. Riser or weir crest (total storage) elevation = _____ft
7. Provided total storage volume = _____ ft^3
8. Wet storage (permanent pool/draw-down) elevation _____ft
9. Provided wet storage volume =_____ ft^3
10. Provided dry storage volume =_____ ft^3
11. Basin cleanout elevation (located at ½ wet storage depth) = _____ ft
12. Distance from riser crest elevation to cleanout elevation =_____ ft

Surface Area Design

13. Q_{10} = _____cfs (peak inflow from 10-yr, 24-hr storm event; attach computations)
14. Minimum basin surface area ≥ 0.0035 x Q_{10} =_____ac ≤ _____ac
    required **provided**

Principal Spillway (Q_{ps})
(See Figure G.1)

15. Design Q_{ps} for barrel = _____ cfs (min. 10% of Q_{10})
16. Barrel head, H = _____ ft; Barrel length, L = _____ ft
17. Barrel dia. = _____ in (min. 10 inch); Q_{ps} = _____ (Q from Table G.7 or G.8) x _____ (length correction factor) = _____ cfs**. Note: Q_{ps} must equal or exceed Design Q_{ps}**
18. Riser dia. = _____ in; Riser height = _____ ft; Riser head (h) = _____ ft
19. Trash rack dia. =_____ in; Trash rack height = _____ in

Emergency Spillway (Q_{es})
(See Figures G.3 and G.4)

20. Emergency spillway capacity Q_{es} = Q_{10} - Q_{ps} =_____ -_____ =_____ cfs
21. Width, b =_____ ft; Hp = _____ ft
22. Exit channel slope _____%
23. Emergency Spillway Crest = _____ ft
24. Design High Water = _____ ft
25. Settled top of embankment elevation =_____ ft

Table G.6: Temporary Sediment Basin Design Data Sheet (continued)

Anti-Seep Collar Design (If Required)
(See Figures G.5 and G.6)

26. y = _____ ft; z =_____:1; pipe slope = _____ %; Ls = _____ ft
27. Use _____ collars, _____ ft - _____ in. square; projection = _____ ft

Draw-Down Device
(See Table G.10 and Details G-2-6 and G-2-7)

28. $Q_{d\text{-}d}$ = _____ cfs
29. Calculated A_o = _____ ft^2
30. Calculated d_o = _____ in
31. Maximum diameter from Table G.10 = _____ in
32. Design d_o = smaller of line 30 or line 31 = _____ in
33. Draw-down device pipe diameter = _____ in
34. Minimum A_t = total area of perforations = $4A_o$ = _____ ft^2
35. Perforation diameter = _____ in
36. Minimum number of perforations = _____
37. Number of longitudinal rows =_____
38. Perforated pipe length = _____ ft
39. Actual A_t = (0.0055 ft^2) x (line 37 ÷ 0.5 ft) x (line 38) = _____ ft^2 (must be ≥ line 34)

Baffle Board Design
(See Detail G-2-4)

40. A = surface area at wet storage elevation = _____ ft^2
41. Effective width, $W_e = (A/2)^{1/2}$ = _____ ft
42. Flow length from inflow point to outlet = _____ ft
43. If line 42 is less than W_e x 2, provide baffle boards to lengthen flow path
44. Effective flow length, $L_e = L_1 + L_2 + L_3$ = _____ ft (must be ≥ W_e x 2 = _____ ft)

INSTRUCTIONS FOR TEMPORARY BASIN DESIGN DATA SHEET (Table G.6)

1. The area draining to the basin includes the entire contributory drainage area, both on-site and off-site. Do not compute storage volumes based only on the disturbed area.

2. The total required volume of storage is the minimum storage volume that must be provided. It equals 3600 cubic feet per acre (ft^3/ac) of drainage area.

3. The required wet volume of storage is the minimum wet storage volume that must be provided. It equals 1800 cubic feet per acre (ft^3/ac) of drainage area.

4. The required dry volume of storage is the minimum dry storage volume that must be provided. It equals 1800 cubic feet per acre (ft^3/ac) of drainage area.

5. Establish the bottom elevation of the basin based on required storage volume, shape, and location of the basin.

6. Determine the design elevation of the riser crest. The riser crest or weir crest elevation corresponds to the total storage volume. This is also the top of the dry storage volume.

7. Using contour information and the average area method or other suitable means, compute the storage volume provided from the bottom of the basin to the riser/weir crest elevation.

8. The wet storage elevation corresponds to the surface of the permanent pool. The dry storage volume (above the permanent pool) is dewatered to the permanent pool elevation through the draw-down device.

9. Using contour information and the average area method or other suitable means, compute the wet storage volume provided from the bottom of the basin to the permanent pool elevation (the invert of the draw-down device).

10. Using contour information and the average area method or other suitable means, compute the dry storage volume provided from the permanent pool elevation to the riser/weir crest elevation. The dry storage volume should equal the total storage volume minus the wet storage volume.

11. Before the settled sediment reaches one-half the wet storage depth the basin needs to be cleaned out. The basin cleanout elevation corresponds to the half-way mark between the basin bottom and the wet storage elevation.

12. To aid field personnel, the distance from the riser/weir crest to the cleanout elevation needs to be marked on the riser or weir wall. This equals the riser/weir crest elevation minus the cleanout elevation.

13. Compute the peak flow rate, Q_{10}, for the 10-year, 24-hour storm event for the entire contributory drainage area into the basin using approved NRCS methods and assuming worst soil cover conditions.

14. Compute the minimum required basin surface area using the equation given on the Sediment Basin Design Data Sheet. The provided surface area is the surface area that corresponds to the top of the wet storage. If the provided surface area is insufficient, return to line 5 and reconfigure the basin.

15. Design the principal spillway to have a minimum discharge capacity equal to 10 percent of Q_{10} or the flow rate through a 10 inch pipe, whichever is greater. Note: If there is no emergency spillway then $Q_{ps} = Q_{10}$.

16. Based on the storage volume, the topography in and around the basin, and Figure G.1, determine L, the length of the barrel, and H, the distance between the centerline of the outlet pipe and the design high water elevation for Q_{10}.

17. Using Table G.7 or G.8, determine the barrel diameter corresponding to H and Q_{ps}. For pipe lengths other than 70 feet, adjust the flow rates using the correction factors provided. The barrel must be at least 10 inches in diameter. If the principal spillway is designed to pass Q_{10}, a minimum cross-sectional area of 3 ft^2 is required.

18. Determine the riser diameter, height, and "h" to release the principal spillway discharge using the solid lines on Figure G.2. (Note that "H" on Figure G.2 corresponds to "h" on Figure G.1.) Set the riser crest 1 foot (minimum) below the emergency spillway (See Figure G.1).

19. Determine the trash rack and anti-vortex device size using Detail G-2-3, Concentric Trash Rack and Anti-Vortex Device.

20. Compute the capacity required for the emergency spillway, Q_{es}, by subtracting the actual flow carried by the principal spillway from Q_{10}.

21. Using Table G.9, Figure G.3, and Figure G.4, determine values of H_p and bottom width for the emergency spillway.

22. Determine the exit channel slope.

23. Determine the design elevation of the emergency spillway crest.

24. Design high water is the elevation of the emergency spillway crest plus the value of H_p. If there is not a separate emergency spillway, add H_p to the principal spillway crest. (This elevation also corresponds to the barrel head from line 16.)

25. The settled constructed top of embankment requires a 1.0 foot minimum of freeboard above design high water. To allow for settlement design the top of dam elevation to include a minimum 10 percent increase in height.

26. Refer to Figure G.5 Anti-Seep Collar Design.

27. Refer to the Instruction Sheet for Designing Anti-Seep Collars (page G.39) and Figure G.6 to determine the size and number of anti-seep collars.

28. Calculate $Q_{d\text{-}d}$ using the equation provided with Table G.10 Draw-Down Device Orifice Sizing. $Q_{d\text{-}d}$ is the average flow rate required to drain the dry storage volume in 10 hours.

29. Calculate A_o using the equation provided with Table G.10.

30. Calculate d_o using the equation provided with Table G.10.

31. Based on drainage area (line 1), read the corresponding Maximum Internal Orifice Diameter d_o from Table G.10.

32. The design internal orifice diameter is the smaller of line 31 or line 32. The size of the internal orifice governs the discharge between the riser crest and permanent pool elevations, with the draw-down time being 10 hours (minimum).

33. The diameter of the pipe used for the draw-down device must meet the minimum pipe diameter corresponding to the respective orifice diameter, as listed in Table G.10.

34. Calculate the minimum required perforation area. It equals four times the internal orifice area.

35. Decide on the diameter of the perforations. The recommended perforation diameter is 1 inch (0.0055 ft^2 area).

36. Divide line 34 by the perforation area (use 0.0055 ft^2 for 1 inch perforations).

37. Determine the number of longitudinal rows based on pipe diameter and as close to 6 inch spacing as possible between rows. For example, an 8 inch diameter pipe (25.1 inch circumference) would have 4 rows of perforations running the length of the pipe. Perforation spacing along the length of the pipe should also be 6 inches.

    Note: If the length of the draw-down device exceeds a reasonable length, consider using a multiple pipe configuration or reducing the perforation spacing. Any deviations from the standard detail must be indicated clearly on the plans.

38. Determine the length of perforated pipe required to provide sufficient perforations so that the total area of perforations is greater than, or equal to, four times the internal orifice area. For 1 inch diameter holes and 6 inch spacing, $L \geq (4A_o)(0.5ft)/(0.0055\ ft^2)$(number of rows).

39. Check that the total provided perforation area exceeds the minimum required perforation area. The numbers provided in step 38 are based on 1 inch perforations spaced 6 inches apart. Total area of perforations = (area of each perforation) x (number of perforations/foot of pipe) x (length of perforated section).

40. This is the provided surface area from line 14, converted to square feet. It corresponds to the area at the top of the wet storage elevation.

41. The effective width is the width the basin would have if it had a length: width ratio equal to 2:1. Calculate the effective width using the equation $W_e = (A/2)^{0.5}$.

42. Measure the distance from the inflow point to the outlet. If there is more than one inflow point, calculate the length separately for each point.

43. Baffles are required when the distance between the inflow and outflow points is less than twice the effective width (W_e).

44. Locate and size baffles so the flow path from the inflow point around the baffles to the riser exceeds 2 x W_e.

Figure G.1: Principal Spillway Design

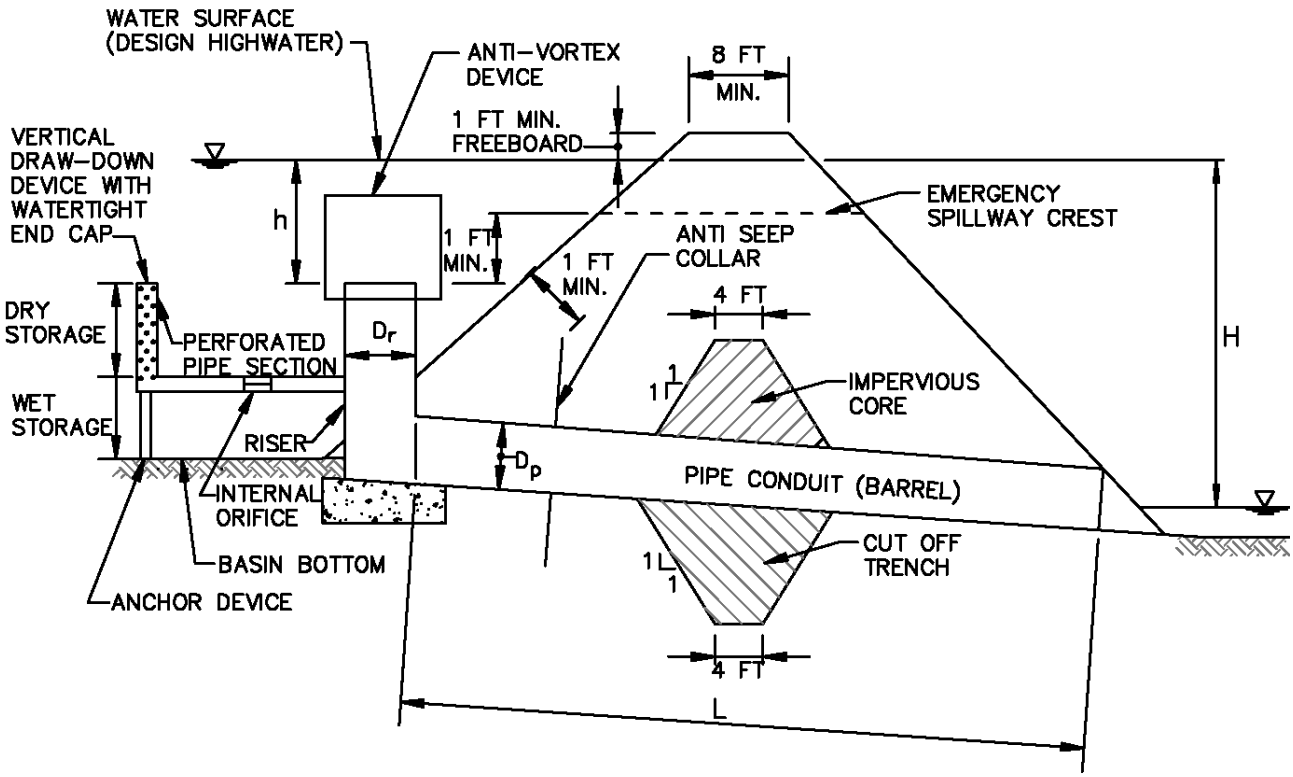

LEGEND

H	=	HEAD ON PIPE SPILLWAY (PIPE FLOW), IN FEET MEASURED FROM THE CENTERLINE OF OUTLET OR TAILWATER ELEVATION, WHICHEVER IS GREATER, TO THE EMERGENCY SPILLWAY CREST OR TO DESIGN HIGH WATER, WHICHEVER IS GREATER
h	=	HEAD OVER RISER CREST, IN FEET
L	=	LENGTH OF PIPE IN FEET
D_p	=	DIAMETER OF PIPE CONDUIT (BARREL)
D_r	=	DIAMETER OF RISER

*NOTE: PREFERENCE IS FOR ANTI-SEEP COLLARS TO BE OUTSIDE OF CUTOFF TRENCH.

Table G.7: Corrugated Metal Pipe Inlet Flow Chart

Flow in Cubic Feet per Second (cfs)

70 Feet of Corrugated Metal Pipe Conduit
$K_m = K_e + K_b = 1.00$; Full Flow Assumed; n=0.025

H \ D	10"	12"	15"	18"	21"	24"	30"	36"	42"	48"	54"	60"	66"	72"
1'	1.25	1.98	3.48	5.47	7.99	11.0	18.8	28.8	41.1	55.7	72.6	91.8	113	137
2'	1.76	2.80	4.92	7.74	11.3	15.6	26.6	40.8	58.2	78.8	103	130	160	194
3'	2.16	3.43	6.02	9.48	13.8	19.1	32.6	49.9	71.2	96.5	126	159	196	237
4'	2.49	3.97	6.96	10.9	16.0	22.1	37.6	57.7	82.3	111	145	184	226	274
5'	2.79	4.43	7.78	12.2	17.9	24.7	42.1	64.5	92.0	125	162	205	253	306
6'	3.05	4.86	8.52	13.4	19.6	27.0	46.1	70.6	101	136	178	225	277	336
7'	3.30	5.25	9.20	14.5	21.1	29.2	49.8	76.3	109	147	192	243	300	362
8'	3.53	5.61	9.84	15.5	22.6	31.2	53.2	81.5	116	158	205	260	320	388
9'	3.74	5.95	10.4	16.4	24.0	33.1	56.4	86.5	123	167	218	275	340	411
10'	3.94	6.27	11.0	17.3	25.3	34.9	59.5	91.2	130	176	230	290	358	433
11'	4.13	6.58	11.5	18.2	26.5	36.6	62.4	95.6	136	185	241	304	376	454
12'	4.32	6.87	12.1	19.0	27.7	38.2	65.2	99.9	142	193	252	318	392	475
13'	4.49	7.15	12.6	19.7	28.8	39.8	67.8	104	148	201	262	331	408	494
14'	4.66	7.42	13.0	20.5	29.9	41.3	70.4	108	154	208	272	343	424	513
15'	4.83	7.68	13.5	21.2	30.9	42.8	72.8	112	159	216	281	355	439	531

L (ft) **CORRECTION FACTORS FOR OTHER PIPE LENGTHS**

20	1.58	1.53	1.47	1.42	1.37	1.34	1.28	1.24	1.20	1.18	1.16	1.14	1.13	1.11
30	1.39	1.36	1.32	1.29	1.27	1.24	1.21	1.18	1.15	1.13	1.12	1.11	1.10	1.09
40	1.25	1.23	1.21	1.20	1.18	1.17	1.14	1.12	1.11	1.10	1.09	1.08	1.07	1.06
50	1.15	1.14	1.13	1.12	1.11	1.10	1.09	1.08	1.07	1.06	1.06	1.05	1.05	1.04
60	1.07	1.06	1.06	1.05	1.05	1.05	1.04	1.04	1.03	1.03	1.03	1.02	1.02	1.02
70	1.00	1.00	1.00	1.00	1.00	1.00	1.00	1.00	1.00	1.00	1.00	1.00	1.00	1.00
80	.95	.95	.95	.95	.96	.96	.96	.97	.97	.97	.98	.98	.98	.98
90	.90	.90	.91	.91	.92	.92	.93	.94	.94	.95	.95	.96	.96	.96
100	.86	.86	.87	.88	.89	.89	.90	.91	.92	.93	.93	.94	.94	.95
120	.79	.80	.81	.82	.83	.83	.85	.86	.87	.89	.89	.90	.91	.92
140	.74	.75	.76	.77	.78	.79	.81	.82	.84	.85	.86	.87	.88	.89
160	.69	.70	.71	.73	.74	.75	.77	.79	.80	.82	.83	.84	.85	.86

Example of how to apply correction factor:
For L = 70 ft, H = 5 ft, and D = 36 in, Q = 64.5 cfs
For L = 50 ft, the correction factor = 1.08, and Q = 64.5 cfs x 1.08 = 69.7 cfs

Table G.8: Reinforced Concrete Pipe Inlet Flow Chart

Flow in Cubic Feet per Second (cfs)

70 Feet of Reinforced Concrete Pipe Conduit
$K_m = K_e + K_b = 1.00$; Full Flow Assumed; n=0.013

H \ D	12”	15”	18”	21”	24”	30”	36”	42”	48”	54”	60”	66”	72”	78”	84”	90”	96”	102”
1'	3.08	5.17	7.83	11.1	14.9	24.2	35.8	49.7	65.8	84.2	105	128	153	180	210	242	276	312
2'	4.35	7.31	11.1	15.7	21.0	34.2	50.6	70.3	93.1	119	148	181	216	255	297	342	390	441
3'	5.33	8.95	13.6	19.2	25.8	41.9	62.0	86.1	114	146	182	221	265	312	363	419	478	541
4'	6.15	10.3	15.7	22.1	29.8	48.4	71.6	99.4	132	168	210	255	306	360	420	483	552	624
5'	6.88	11.6	17.5	24.7	33.3	54.1	80.1	111	147	188	234	286	342	403	469	540	617	698
6'	7.54	12.7	19.2	27.1	36.4	59.3	87.7	122	161	206	257	313	374	441	514	592	676	765
7'	8.14	13.7	20.7	29.3	39.4	64.0	94.8	131	174	223	277	338	404	477	555	640	730	826
8'	8.70	14.6	22.2	31.3	42.1	68.5	101	141	186	238	297	361	432	510	594	684	780	883
9'	9.23	15.5	23.5	33.2	44.6	72.6	107	149	197	253	315	383	459	541	630	725	827	936
10'	9.73	16.3	24.8	35.0	47.0	76.5	113	157	208	266	332	404	483	570	664	764	872	987
11'	10.2	17.1	26.0	36.7	49.3	80.3	119	165	218	279	348	424	507	598	696	802	915	1035
12'	10.7	17.9	27.1	38.3	51.5	83.9	124	172	228	292	363	442	530	624	727	837	955	1081
13'	11.1	18.6	28.2	39.9	53.6	87.3	129	179	237	304	378	461	551	650	757	872	994	1125
14'	11.5	19.3	29.3	41.4	55.7	90.6	134	186	246	315	392	478	572	674	785	904	103	1168
15'	11.9	20.0	30.3	42.9	57.6	93.8	139	192	255	326	406	495	592	698	813	936	106	1209

L (ft) **CORRECTION FACTORS FOR OTHER PIPE LENGTHS**

20	1.30	1.24	1.21	1.18	1.15	1.12	1.10	1.08	1.07	1.06	1.05	1.05	1.04	1.04	1.03	1.03	1.03	1.03
30	1.22	1.18	1.15	1.13	1.12	1.09	1.08	1.07	1.05	1.05	1.04	1.04	1.03	1.03	1.03	1.02	1.02	1.02
40	1.15	1.13	1.11	1.10	1.08	1.07	1.05	1.05	1.04	1.03	1.03	1.03	1.02	1.02	1.02	1.02	1.02	1.02
50	1.09	1.08	1.07	1.06	1.05	1.04	1.04	1.03	1.03	1.02	1.02	1.02	1.02	1.01	1.01	1.01	1.01	1.01
60	1.04	1.04	1.03	1.03	1.03	1.02	1.02	1.02	1.01	1.01	1.01	1.01	1.01	1.01	1.01	1.01	1.01	1.01
70	1.00	1.00	1.00	1.00	1.00	1.00	1.00	1.00	1.00	1.00	1.00	1.00	1.00	1.00	1.00	1.00	1.00	1.00
80	.96	.97	.97	.97	.98	.98	.98	.99	.99	.99	.99	.99	.99	.99	.99	.99	.99	.99
90	.93	.94	.94	.95	.95	.96	.97	.97	.98	.98	.98	.98	.98	.99	.99	.99	.99	.99
100	.90	.91	.92	.93	.93	.95	.95	.96	.97	.97	.97	.98	.98	.98	.98	.98	.98	.99
120	.84	.86	.87	.89	.90	.91	.93	.94	.94	.95	.96	.96	.96	.97	.97	.97	.97	.98
140	.80	.82	.83	.85	.86	.88	.90	.91	.92	.93	.94	.94	.95	.95	.96	.96	.96	.97
160	.76	.78	.80	.82	.83	.86	.88	.89	.90	.91	.92	.93	.94	.94	.95	.95	.95	.96

Example of how to apply correction factor:
For L = 70 ft, H = 5 ft, and D = 36 in, Q = 80.1 cfs
For L = 50 ft, the correction factor = 1.04, and Q = 80.1 cfs x 1.04 = 83.3

Figure G.2: Riser Inflow Curves

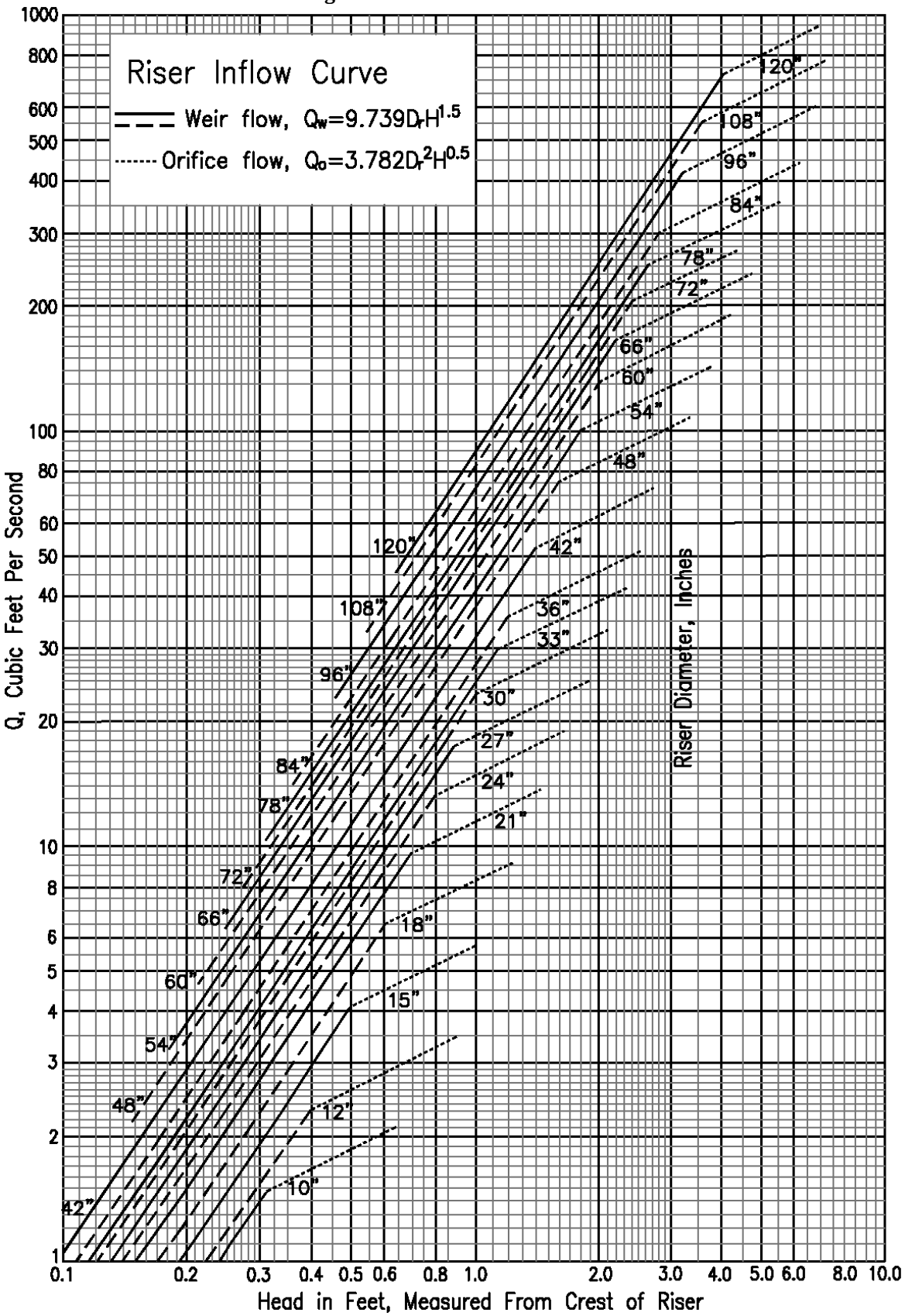

Figure G.3: Emergency Spillway Design

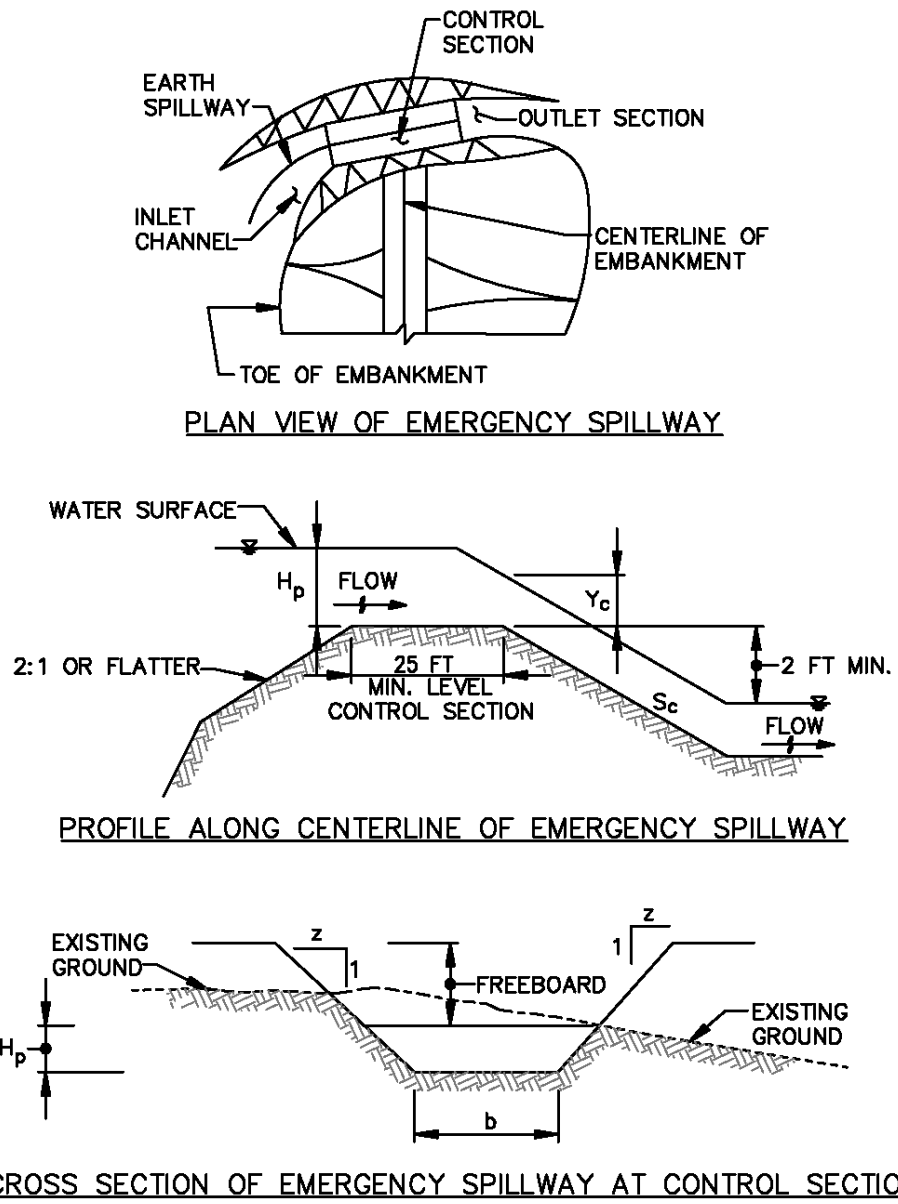

LEGEND

H_p= DIFFERENCE IN ELEVATION BETWEEN THE CREST OF THE EMERGENCY SPILLWAY IN THE CONTROL SECTION AND WATER SURFACE, IN FEET

b = BOTTOM WIDTH OF EMERGENCY SPILLWAY AT THE CONTROL SECTION, IN FEET (8 FEET MINIMUM)

S_C = FLATTEST SLOPE, IN PERCENT, ALLOWABLE FOR THE CHANNEL BELOW THE CONTROL SECTION

z = SIDE SLOPE RATIO MINIMUM z = 2

Y_C = CRITICAL DEPTH AT THE CONTROL SECTION

Figure G.4: Emergency Spillway

LEGEND

n = MANNING'S ROUGHNESS COEFFICIENT

Hp = DIFFERENCE IN ELEVATION BETWEEN THE CREST OF THE EMERGENCY SPILLWAY IN THE CONTROL SECTION AND WATER SURFACE OF THE RESERVOIR, IN FEET

b = BOTTOM WIDTH OF EMERGENCY SPILLWAY AT THE CONTROL SECTION, IN FEET. (8 FT MINIMUM)

Qc = TOTAL DISCHARGE, IN CUBIC FEET PER SECOND

Vc = VELOCITY, IN FEET PER SECOND, THAT WILL EXIST IN THE CHANNEL BELOW THE CONTROL SECTION, AT DESIGN Qc, IF CONSTRUCTED TO SLOPE (Sc) THAT IS SHOWN. (Vmax. = 5 FPS)

Sc = FLATTEST SLOPE (Sc), IN %, ALLOWABLE FOR THE CHANNEL BELOW THE CONTROL SECTION

x = MINIMUM LENGTH OF THE CHANNEL BELOW THE CONTROL SECTION, IN FEET

z = SIDE SLOPE RATIO. (MINIMUM z = 2)

Yc = CRITICAL DEPTH AT THE CONTROL SECTION

Ac = FLOW AREA AT CRITICAL DEPTH

T = TOP WIDTH OF FLOW AT CRITICAL DEPTH

Hec = ENERGY AT CRITICAL DEPTH

a = CORRECTION FACTOR

Hp = HEAD ON EMERGENCY SPILLWAY

R = HYDRAULIC RADIUS AT CRITICAL DEPTH

NOTES

FOR A GIVEN Hp A DECREASE IN THE EXIT SLOPE FROM Sc DECREASES THE SPILLWAY DISCHARGE BUT INCREASING THE EXIT SLOPE FROM Sc DOES NOT INCREASE THE DISCHARGE. IF AN EXIT SLOPE(Se) STEEPER THAN Sc IS USED, THEN THE VELOCITY (Ve) IN THE EXIT CHANNEL WILL INCREASE ACCORDING TO THE FOLLOWING RELATIONSHIP:

$$V_e = V_c \left(\frac{S_e}{S_c} \right)^{0.3}$$

(1) $Ac = (b + ZYc)\ Yc$

(2) $T = b + 2ZYc$

(3) $Qc = (gA^3/T)^{0.5}$

(4) $Vc = (gA/T)^{0.5}$

(5) $Hec = Yc + Vc^2/2g$

(6) $a = (4.32n^2)\ /Hec^{1.33}$

(7) $Hp = Hec\ (1 + aL)$

(8) $R = (b + ZYc)Yc/(b + 2Yc(1 + Z\ )^{0.5})$

(9) $Sc = 14.56n^2A/(R^{1.33})\ T$

SELECTED Yc (ft)	Ac (ft^2)	T (ft)	Qc (cfs)	Vc (fps)	Hec (ft)	a	Hp (ft)	R (ft)	Sc (ft/ft)		ELEV
0.00			0.00								0.00

Note: For a flow calculator, go to
http://www.mde.state.md.us/assets/document/damsafety/DambreakGuidelines/Spreadsheets/Hydraulics/SPILLWAY.XLS

Table G.9: Design Data for Earth Spillways

Stage (Hp) in Feet	Spillway Variables	Bottom Width (b) in Feet																
		8	10	12	14	16	18	20	22	24	26	28	30	32	34	36	38	40
0.5	Q	6	7	8	10	11	13	14	15	17	18	20	21	22	24	25	27	28
	V	2.7	2.7	2.7	2.7	2.7	2.7	2.7	2.7	2.7	2.7	2.7	2.7	2.7	2.7	2.7	2.7	2.7
	S	3.9	3.9	3.9	3.9	3.8	3.8	3.8	3.8	3.8	3.8	3.8	3.8	3.8	3.8	3.8	3.8	3.8
0.6	Q	8	10	12	14	16	18	20	22	24	26	28	30	32	34	35	37	39
	V	3	3	3	3	3	3	3	3	3	3	3	3	3	3	3	3	3
	S	3.7	3.7	3.7	3.7	3.6	3.7	3.6	3.6	3.6	3.6	3.6	3.6	3.6	3.6	3.6	3.6	3.6
0.7	Q	11	13	16	18	20	23	25	28	30	33	35	38	41	43	44	46	48
	V	3.2	3.2	3.3	3.3	3.3	3.3	3.3	3.3	3.3	3.3	3.3	3.3	3.3	3.3	3.3	3.3	3.3
	S	3.5	3.5	3.4	3.4	3.4	3.4	3.4	3.4	3.4	3.4	3.4	3.4	3.4	3.4	3.4	3.4	3.4
0.8	Q	13	16	19	22	26	29	32	35	38	42	45	46	48	51	54	57	60
	V	3.5	3.5	3.5	3.6	3.6	3.6	3.6	3.6	3.6	3.6	3.6	3.6	3.6	3.6	3.6	3.6	3.6
	S	3.3	3.3	3.3	3.2	3.2	3.2	3.2	3.2	3.2	3.2	3.2	3.2	3.2	3.2	3.2	3.2	3.2
0.9	Q	17	20	24	28	32	35	39	43	47	51	53	57	60	64	68	71	75
	V	3.7	3.8	3.8	3.8	3.8	3.8	3.8	3.8	3.8	3.8	3.8	3.8	3.8	3.8	3.8	3.8	3.8
	S	3.2	3.1	3.1	3.1	3.1	3.1	3.1	3.1	3.1	3.1	3.1	3.1	3.1	3.1	3.1	3.1	3.1
1	Q	20	24	29	33	38	42	47	51	56	61	63	68	72	77	81	86	90
	V	4	4	4	4	4	4	4	4	4	4	4	4	4	4	4	4	4
	S	3.1	3	3	3	3	3	3	3	3	3	3	3	3	3	3	3	3
1.1	Q	23	28	34	39	44	49	54	60	65	70	74	79	84	89	95	100	105
	V	4.2	4.2	4.2	4.3	4.3	4.3	4.3	4.3	4.3	4.3	4.3	4.3	4.3	4.3	4.3	4.3	4.3
	S	2.9	2.9	2.9	2.9	2.9	2.9	2.9	2.9	2.9	2.8	2.8	2.8	2.8	2.8	2.8	2.8	2.8
1.2	Q	28	33	40	45	51	58	64	69	76	80	86	92	98	104	110	116	122
	V	4.4	4.4	4.4	4.4	4.4	4.5	4.5	4.5	4.5	4.5	4.5	4.5	4.5	4.5	4.5	4.5	4.5
	S	2.9	2.9	2.8	2.8	2.8	2.8	2.8	2.8	2.8	2.8	2.8	2.8	2.8	2.8	2.8	2.8	2.8
1.3	Q	32	38	46	53	58	65	73	80	86	91	99	106	112	119	125	133	140
	V	4.5	4.6	4.6	4.6	4.6	4.6	4.7	4.7	4.7	4.7	4.7	4.7	4.7	4.7	4.7	4.7	4.7
	S	2.8	2.8	2.8	2.7	2.7	2.7	2.7	2.7	2.7	2.7	2.7	2.7	2.7	2.7	2.7	2.7	2.7
1.4	Q	37	44	51	59	66	74	82	90	96	103	111	119	127	134	143	150	158
	V	4.8	4.8	4.8	4.8	4.8	4.8	4.8	4.8	4.8	4.9	4.9	4.9	4.9	4.9	4.9	4.9	4.9
	S	2.8	2.7	2.7	2.7	2.7	2.7	2.7	2.6	2.6	2.6	2.6	2.6	2.6	2.6	2.6	2.6	2.6
1.5	Q	41	50	58	66	75	85	92	101	108	116	125	133	142	150	160	169	178
	V	4.8	4.9	5	5	5	5	5	5	5	5	5	5	5	5	5.1	5.1	5.1
	S	2.7	2.7	2.6	2.6	2.6	2.6	2.6	2.6	2.6	2.6	2.6	2.6	2.6	2.6	2.5	2.5	2.5
1.6	Q	46	56	65	75	84	94	104	112	122	132	142	149	158	168	178	187	197
	V	5	5.1	5.1	5.1	5.1	5.2	5.2	5.2	5.2	5.2	5.2	5.2	5.2	5.2	5.2	5.2	5.2
	S	2.6	2.6	2.6	2.6	2.5	2.5	2.5	2.5	2.5	2.5	2.5	2.5	2.5	2.5	2.5	2.5	2.5
1.7	Q	52	62	72	83	94	105	115	126	135	145	156	167	175	187	196	206	217
	V	5.2	5.2	5.2	5.3	5.3	5.3	5.3	5.4	5.4	5.4	5.4	5.4	5.4	5.4	5.4	5.4	5.4
	S	2.6	2.6	2.5	2.5	2.5	2.5	2.5	2.5	2.5	2.5	2.5	2.5	2.5	2.5	2.5	2.5	2.5
1.8	Q	58	69	81	93	104	116	127	138	150	160	171	182	194	204	214	226	233
	V	5.3	5.4	5.4	5.5	5.5	5.5	5.5	5.5	5.5	5.5	5.5	5.6	5.6	5.6	5.6	5.6	5.6
	S	2.5	2.5	2.5	2.5	2.4	2.4	2.4	2.4	2.4	2.4	2.4	2.4	2.4	2.4	2.4	2.4	2.4
1.9	Q	64	76	88	102	114	127	140	152	164	175	188	201	213	225	235	248	260
	V	5.5	5.5	5.5	5.6	5.6	5.6	5.7	5.7	5.7	5.7	5.7	5.7	5.7	5.7	5.7	5.7	5.7
	S	2.5	2.5	2.5	2.4	2.4	2.4	2.4	2.4	2.4	2.4	2.4	2.4	2.4	2.4	2.4	2.4	2.4
2	Q	71	83	97	111	125	138	153	164	178	193	204	218	232	245	256	269	283
	V	5.6	5.7	5.7	5.7	5.8	5.8	5.8	5.8	5.8	5.8	5.8	5.9	5.9	5.9	5.9	5.9	5.9
	S	2.5	2.4	2.4	2.4	2.4	2.4	2.4	2.4	2.3	2.3	2.3	2.3	2.3	2.3	2.3	2.3	2.3
2.1	Q	77	91	107	122	135	149	162	177	192	207	220	234	250	267	276	291	305
	V	5.7	5.8	5.9	5.9	5.9	5.9	5.9	6	6	6	6	6	6	6	6	6	6
	S	2.4	2.4	2.4	2.3	2.3	2.3	2.3	2.3	2.3	2.3	2.3	2.3	2.3	2.3	2.3	2.3	2.3
2.2	Q	84	100	116	131	146	163	177	194	210	224	238	253	269	288	301	314	330
	V	5.9	5.9	6	6	6	6.1	6.1	6.1	6.1	6.1	6.1	6.1	6.1	6.2	6.2	6.2	6.2
	S	2.4	2.4	2.4	2.3	2.3	2.3	2.3	2.3	2.3	2.3	2.3	2.3	2.3	2.3	2.3	2.3	2.3

DATA TO THE RIGHT OF HEAVY VERTICAL LINES SHOULD BE USED WITH CAUTION, AS THE RESULTING SECTIONS WILL BE EITHER POORLY PROPORTIONED OR AVE VELOCITIES IN EXCESS OF 6 FEET PER SECOND.

Figure G.5: Anti-Seep Collar Design

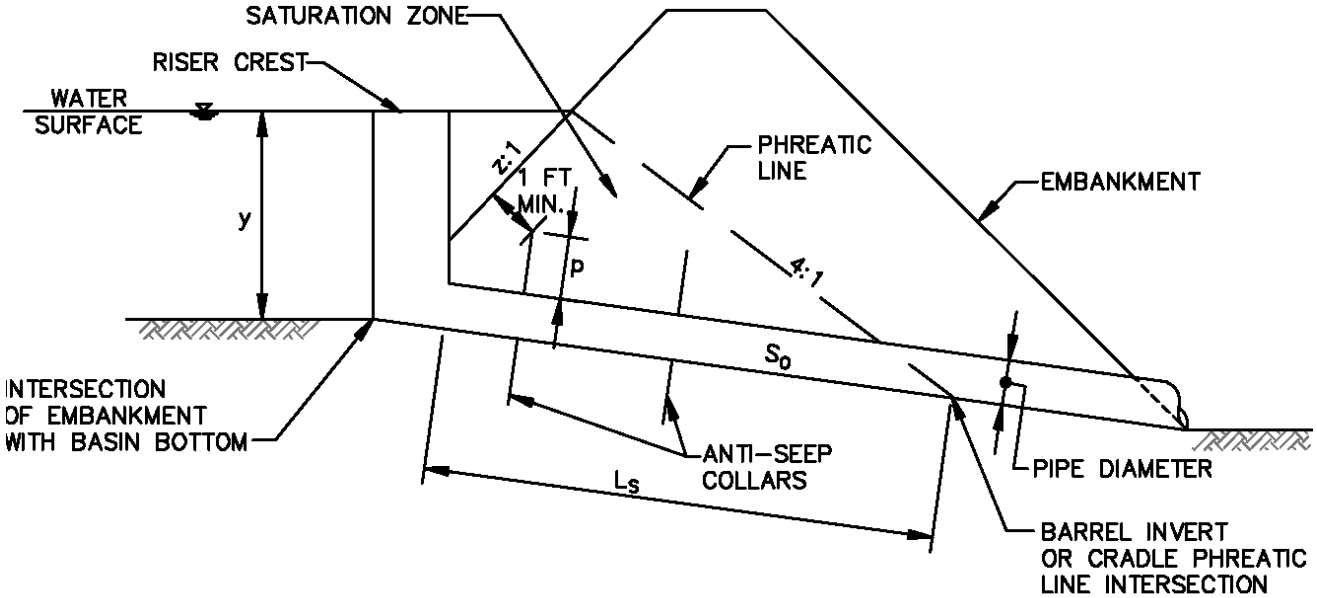

ANTI-SEEP COLLAR DESIGN

LEGEND

p = PERPENDICULAR PROJECTION OF ANTI-SEEP COLLAR (FEET). (2 FEET MINIMUM)

L_S = LENGTH OF PIPE IN THE SATURATED ZONE (FEET)

y = DISTANCE IN FEET FROM UPSTREAM INVERT OF PIPE TO THE CREST OF THE RISER OR THE 10-YR WATER SURFACE ELEVATION FOR A PERMANENT STRUCTURE, WHICHEVER IS HIGHER

z = SLOPE OF UPSTREAM EMBANKMENT AS A RATIO OF z FEET HORIZONTAL TO ONE FOOT VERTICAL

S_0 = SLOPE OF PIPE IN FEET PER FOOT

NOTE: IF BASIN IS TO BE A PERMANENT STORMWATER MANAGEMENT FACILITY, A FILTER DIAPHRAGM IS PREFERRED IN LIEU OF ANTI-SEEP COLLARS.

Refer to Instruction Sheet for Designing Anti-Seep Collars.

INSTRUCTION SHEET FOR
DESIGNING ANTI-SEEP COLLARS

(Refer to Figure G.5)

1. Determine the length of pipe within the embankment's saturation zone (L_S) either graphically or if the upstream slope of the embankment intersects the invert of the pipe at its upstream end, and the slope of the pipe (S_o) is constant, the following equation may be used.

$$L_S = \frac{y(z+4)}{(1-4S_o)}$$

2. Determine the total perpendicular projection (P) required to increase L_S by 15 percent either graphically as shown on Figure G.6 or by using the equation:

$$P = 0.075\ L_S$$

3. Select the perpendicular projection (2 feet minimum) of the anti-seep collar(s) (p) when using multiple collars.

4. Determine the number of anti-seep collars (N) required of the projection (P) using equation:

$$P/p = N$$

5. Either round up N, or repeat steps 3 and 4, to determine optimum p/N relationship.

6. Provide construction specifications relative to the materials to be used and method for attaching the anti-seep collar(s) to the pipe in a watertight manner.

7. Space anti-seep collar(s) between 5 and 14 times the projection of each collar.

8. Place anti-seep collars a minimum of two feet from pipe joints.

9. Place anti-seep collars within the saturation zone. In cases where the spacing limit will not allow this, place at least one collar in the saturation zone.

10. Use anti-seep collars constructed of the same material as the barrel pipe.

.

Figure G.6: Anti-Seep Collar Design Chart

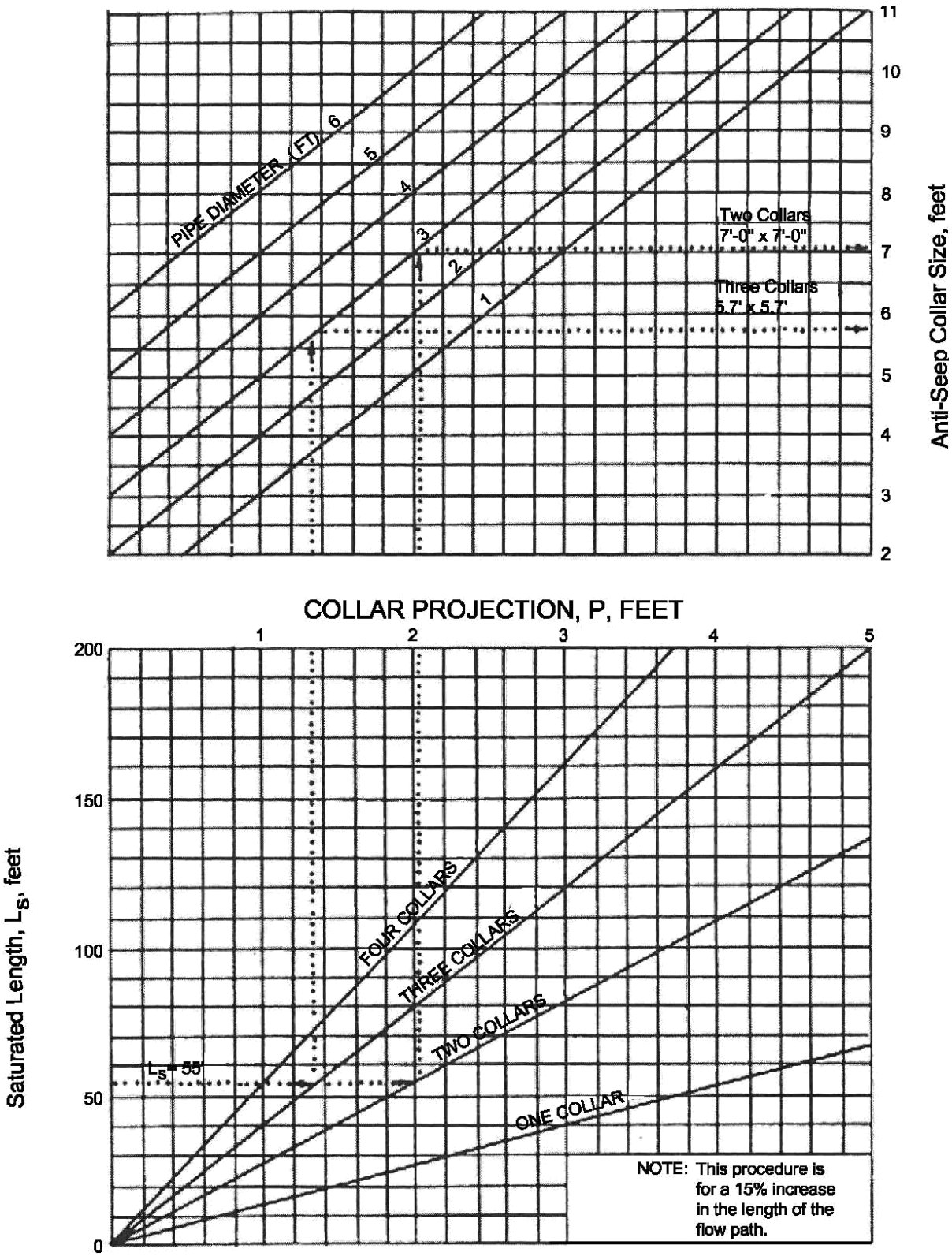

Table G.10: Draw-Down Device Orifice Sizing

Drainage Area (acres)	Maximum Internal Orifice Diameter (d_o)	Maximum Internal Orifice Area (A_o)	Min. Draw-Down Pipe Diameter	Recommended Number of Longitudinal Rows of Perforations
1-10	4 inches	0.087 ft^2	6 inches	3
10-20	6 inches	0.20 ft^2	8 inches	4
20-40	8 inches	0.34 ft^2	10 inches	6
40-60	10 inches	0.55 ft^2	12 inches	6
60-80	12 inches	0.79 ft^2	15 inches	8
80-100	15 inches	1.07 ft^2	18 inches	9

Draw-Down Device Equations

$Q_{d\text{-}d}$ (cfs) = $\frac{\text{(1800 cf/acre)(number of acres)}}{\text{(10 hours)(3600 seconds/hour)}}$ *

$$A_o = \frac{Q_{d-d}}{C\sqrt{2gh_{d-d}}} \qquad d_o = \sqrt{\frac{4A_o}{\pi}}$$

$h_{d\text{-}d}$ = 2/3 (Riser Crest Elevation - Wet Storage Elevation)
C = Orifice Flow Coefficient = 0.6
A_o = Internal Orifice Area (ft^2)
π = 3.14
d_o = Maximum Orifice Diameter
g = Gravitational Constant = 32.2 ft/s^2

*Note: This equals the flow rate required to drain dry storage volume in 10 hours.

Perforations

Perforations must be one inch diameter, spaced six inches vertically and horizontally.

A_t = Total Area of Perforations $\geq 4A_0$

DETAIL G-2-1 TYPICAL ANTI-SEEP COLLARS

STANDARD SYMBOL

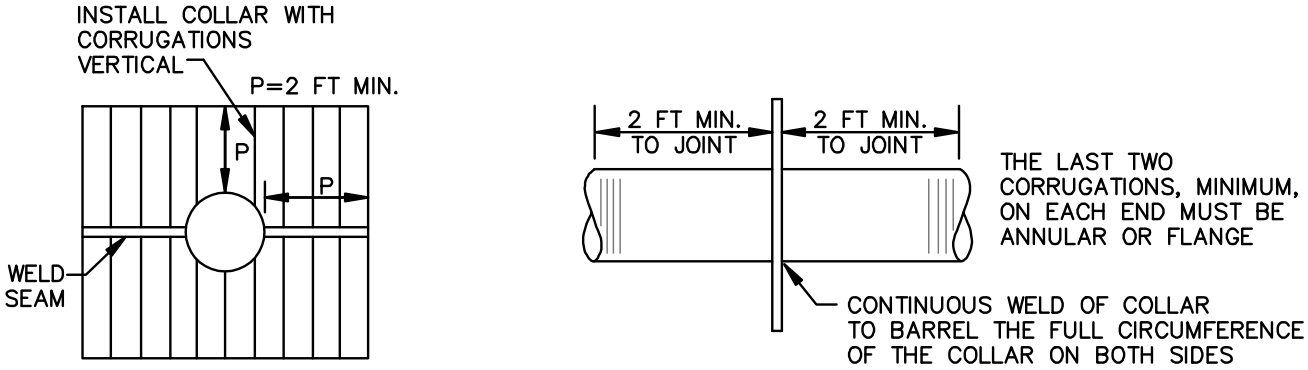

CORRUGATED COLLAR WELDED IN PLACE ON BARREL SECTION

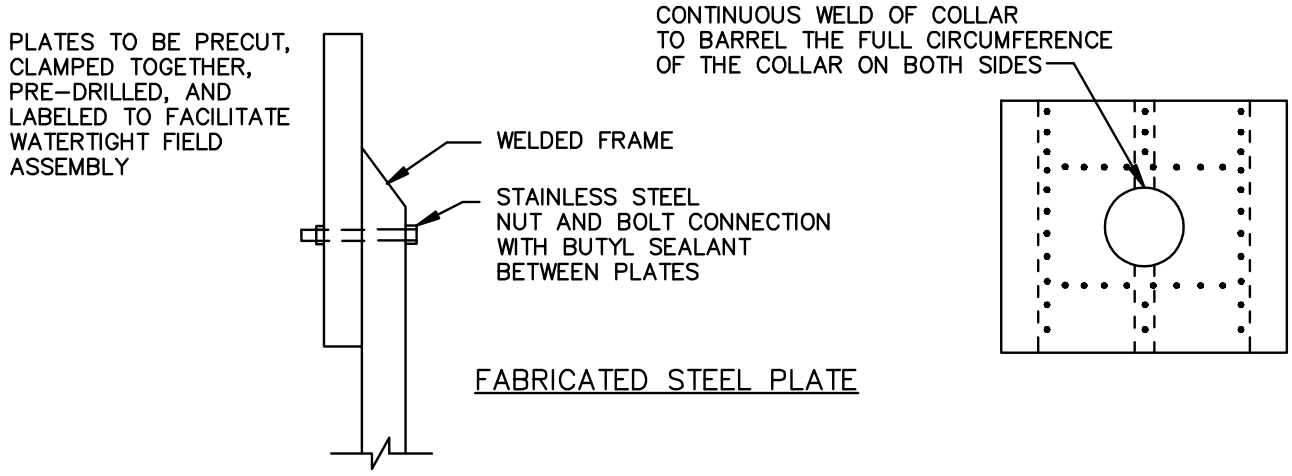

FABRICATED STEEL PLATE

COLLAR FOR FLANGE JOINT PIPE

DETAIL G-2-2 CORRUGATED RISER BASE

STANDARD SYMBOL

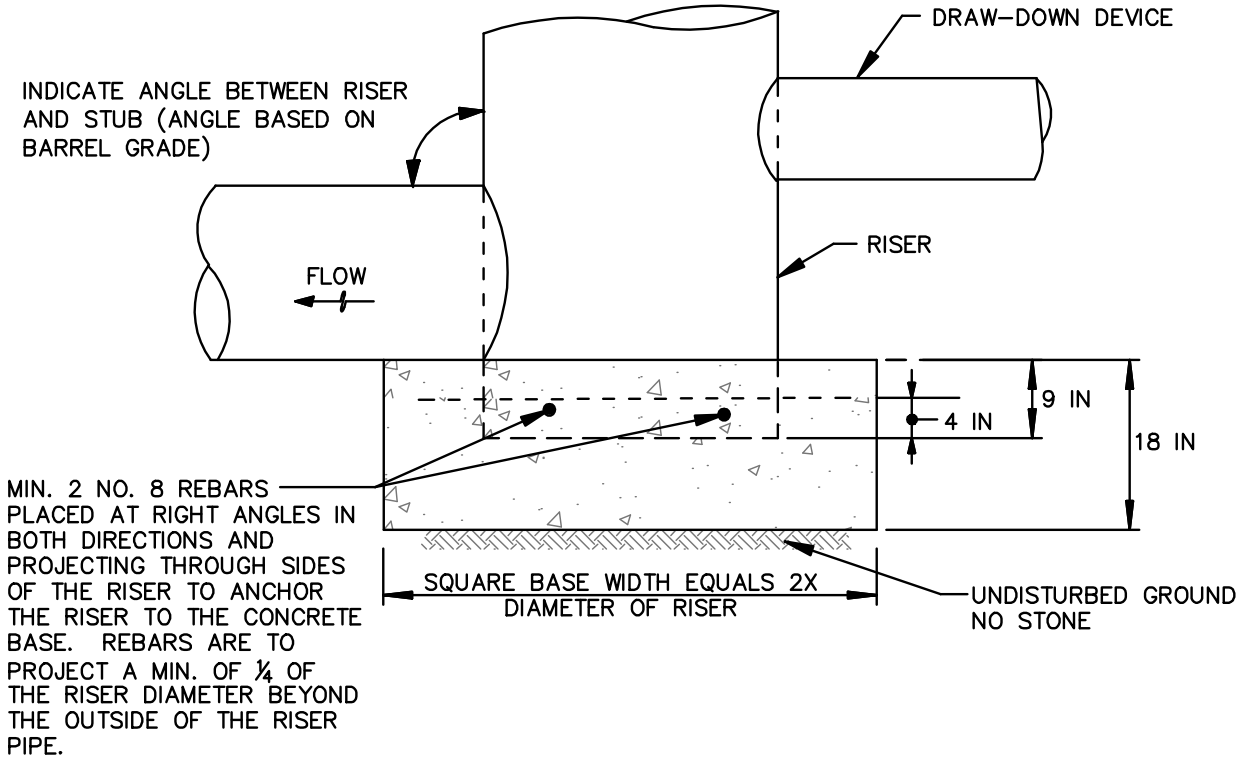

CONSTRUCTION SPECIFICATIONS

1. BOTTOM OF CONCRETE BASE TO BE PLACED ON UNDISTURBED, NATURAL GROUND.
2. NO STONE IS ALLOWED UNDER BASE. IF NECESSARY, TO ACHIEVE STABILITY INCREASE DEPTH OF CONCRETE BASE.

DETAIL G-2-3 CONCENTRIC TRASH RACK AND ANTI-VORTEX DEVICE

STANDARD SYMBOL

TR

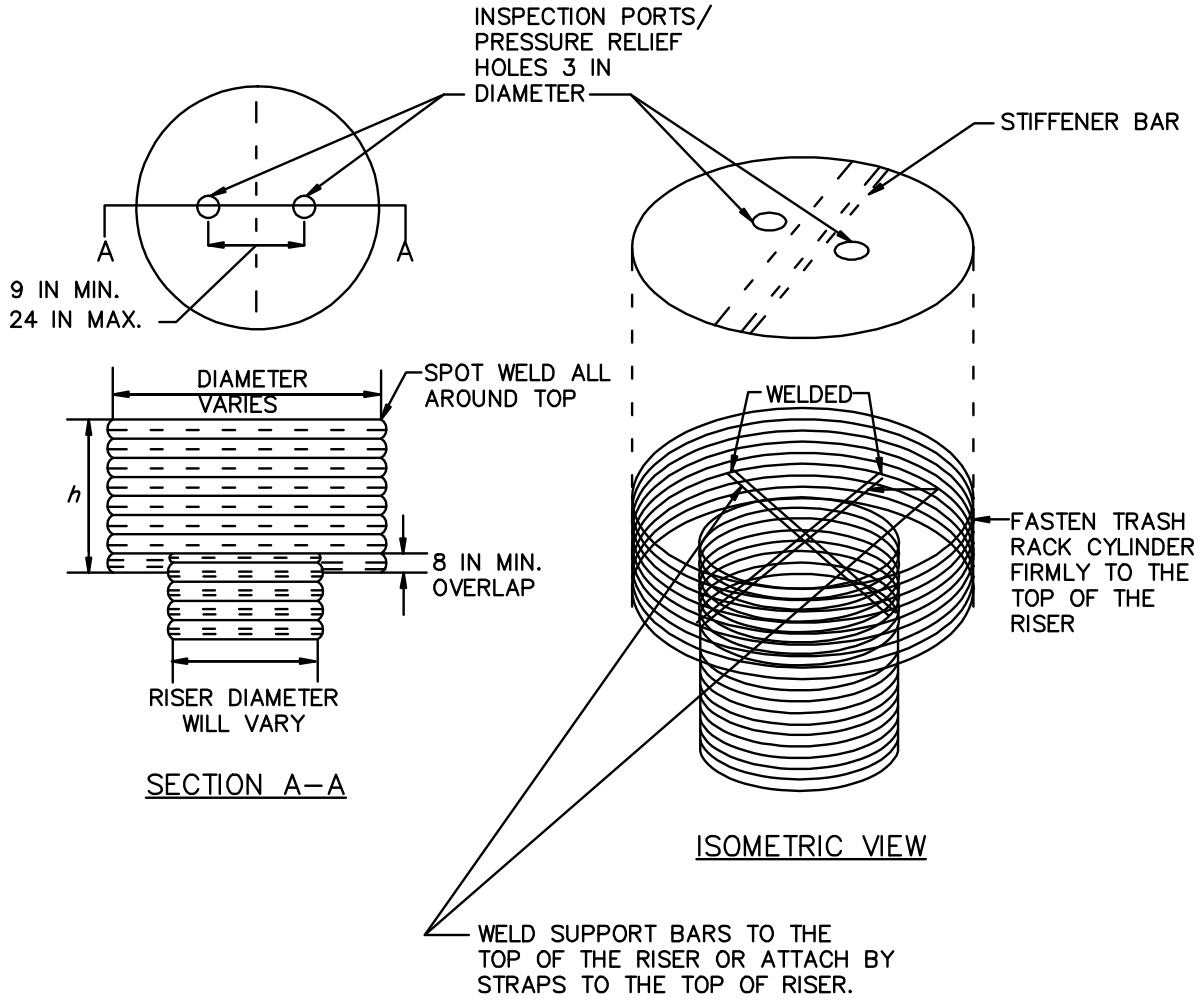

1 OF 2

DETAIL G-2-3 CONCENTRIC TRASH RACK AND ANTI-VORTEX DEVICE

STANDARD SYMBOL

TR

RISER DIAM. (IN)	TRASH RACK CYLINDER DIAM. (IN)	TRASH RACK CYLINDER THICKNESS (GAUGE)	h (IN)	MINIMUM SIZE SUPPORT BAR	MINIMUM TOP THICKNESS (GAUGE)	MINIMUM TOP STIFFENER
12	18	16	14	#6 REBAR	16	N/A
15	21	16	15	#6 REBAR	16	N/A
18	27	16	16	#6 REBAR	16	N/A
21	30	16	19	#6 REBAR	16	N/A
24	36	16	21	#6 REBAR	14	N/A
27	42	16	21	#6 REBAR	14	N/A
36	54	14	25	#8 REBAR	12	N/A
42	60	14	27	#8 REBAR	12	N/A
48	72	12	29	1¼ IN PIPE OR 1¼ x 1¼ x ¼ ANGLE	10	N/A
54	78	12	33	1¼ IN PIPE OR 1¼ x 1¼ x ¼ ANGLE	10	N/A
60	90	12	37	1½ IN PIPE OR 1½ x 1½ x ¼ ANGLE	8	N/A
66	96	10	41	2 IN PIPE OR 2 x 2 x 3/16 ANGLE	8	2 x 2 x ¼ ANGLE
72	102	10	44	2 IN PIPE OR 2 x 2 x 3/16 ANGLE	8	2½ x 2½ x ¼ ANGLE
78	114	10	47	2½ IN PIPE OR 2 x 2 x ¼ ANGLE	8	2½ x 2½ x ¼ ANGLE
84	120	10	50	2½ IN PIPE OR 2½ x 2½ x ¼ ANGLE	8	2½ x 2½ x 5/16 ANGLE

NOTE:

THE ABOVE TRASH RACK AND ANTI–VORTEX DEVICE INFORMATION IS FOR CORRUGATED METAL PIPE ONLY. CONCRETE RISERS MUST MEET THE REQUIREMENTS OF MD 378.

2 OF 2

DETAIL G-2-4 BAFFLE BOARDS

STANDARD SYMBOL

BB

BAFFLES ARE REQUIRED TO PROVIDE A FLOW LENGTH BETWEEN INFLOW POINT AND OUTLET EQUAL TO TWICE THE EFFECTIVE TRAP/BASIN WIDTH.

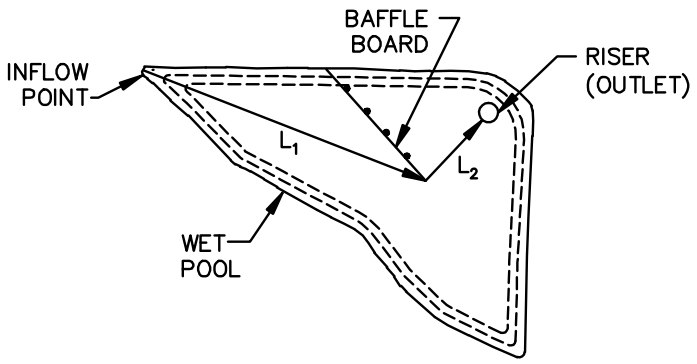

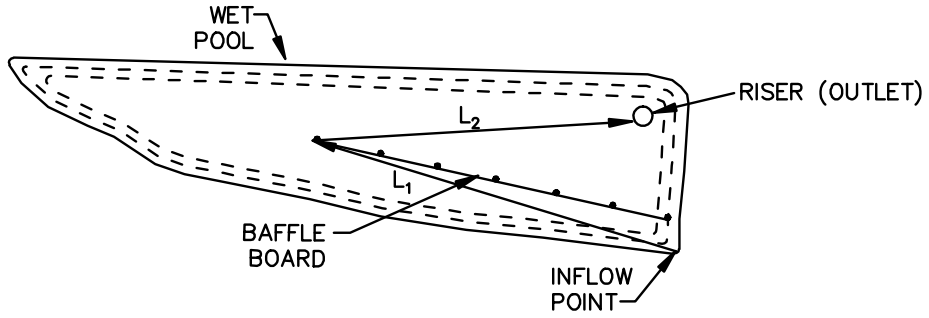

$L_e = L_1 + L_2$

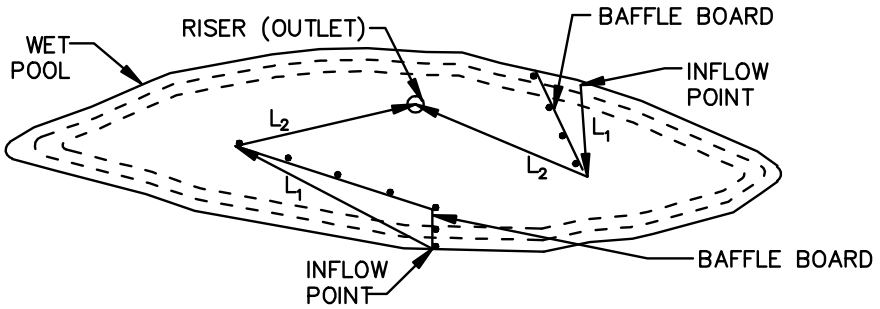

PLAN VIEWS

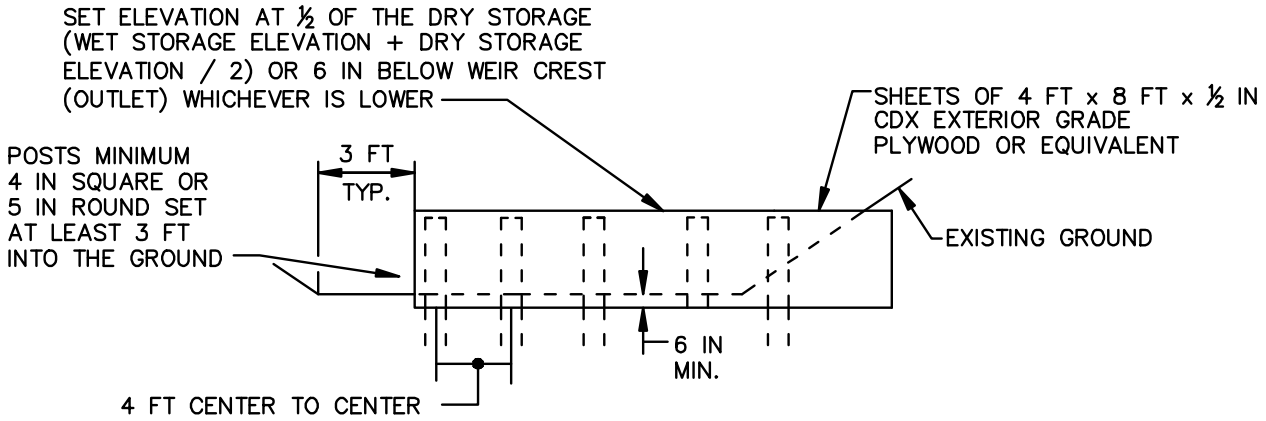

BAFFLE DETAIL

MARYLAND STANDARDS AND SPECIFICATIONS FOR SOIL EROSION AND SEDIMENT CONTROL

U.S. DEPARTMENT OF AGRICULTURE NATURAL RESOURCES CONSERVATION SERVICE	2011	MARYLAND DEPARTMENT OF ENVIRONMENT WATER MANAGEMENT ADMINISTRATION

DETAIL G-2-5 TYPES OF COUPLERS FOR CORRUGATED STEEL PIPE

STANDARD SYMBOL

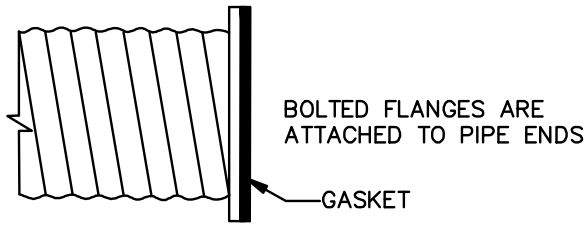

FLANGE JOINT

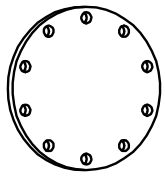

PRE–PUNCHED GASKET

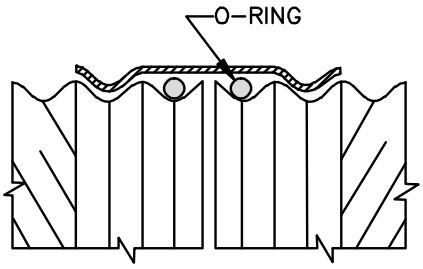

HUGGER (SEMI–CORRUGATED) BAND

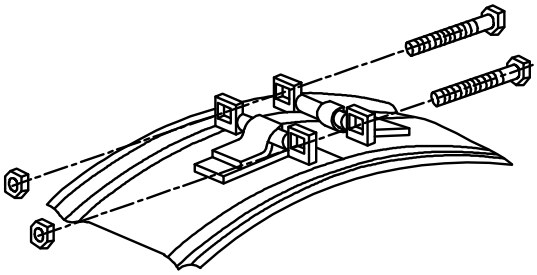

BAR AND STRAP CONNECTOR

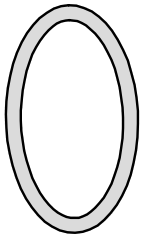

O–RING GASKET

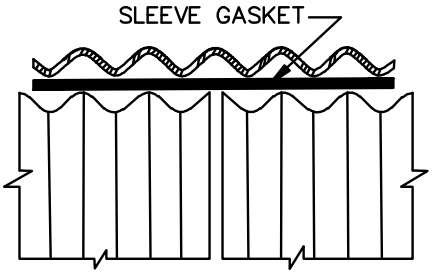

ANULAR CORRUGATED BAND

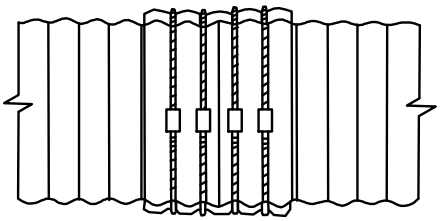

ROD & LUG CONNECTOR

BAND IS SECURED BY ROD AROUND
BAND CONNECTED BY LUGS.

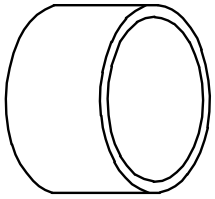

SLEEVE GASKET

NOTE:
UNDER NO CIRCUMSTANCE IS A DIMPLE (UNIVERSAL) BAND ACCEPTABLE FOR USE IN A SEDIMENT CONTROL OR STORMWATER MANAGEMENT STRUCTURE.

CONSTRUCTION SPECIFICATIONS

1. USE A RUBBER OR NEOPRENE GASKET WHEN JOINING PIPE SECTIONS. THE END OF EACH PIPE SHALL BE RE–ROLLED WITH AN ADEQUATE NUMBER OF CORRUGATIONS TO ACCOMMODATE THE BAND WIDTH.
2. FOR PIPES LESS THAN 24 INCHES IN DIAMETER, PROVIDE ONE OF THE FOLLOWING TYPES OF CONNECTIONS:
   a. FLANGED JOINTS WITH ⅜ INCH CLOSED CELL GASKET THE FULL WIDTH OF THE FLANGE, PRE–PUNCHED TO THE FLANGE BOLT CIRCLES, SANDWICHED BETWEEN ADJACENT FLANGES, OR
   b. 12 INCH WIDE HUGGER TYPE BAND WITH O–RING GASKET HAVING A MINIMIMUM DIAMETER OF ½ INCH GREATER THAN THE CORRUGATION DEPTH.
3. FOR PIPES 24 INCHES IN DIAMETER AND LARGER, PROVIDE ONE OF THE FOLLOWING TYPES OF CONNECTIONS:
   a. 24 INCH WIDE ANNULAR CORRUGATED BAND WITH 24 INCH WIDE BY ⅜ INCH THICK CLOSED CELL CIRCULAR SLEEVE GASKET WITH 12 INCHES ON THE END OF EACH PIPE, CONNECTED WITH A MINIMUM OF 4 RODS AND LUGS, 2 ON EACH CONNECTING PIPE END, OR
   b. FLANGED JOINTS WITH ⅜ INCH CLOSED CELL GASKET THE FULL WIDTH OF THE FLANGE, PRE–PUNCHED TO THE FLANGE BOLT CIRCLES, AND SANDWICHED BETWEEN ADJACENT FLANGES.

MARYLAND STANDARDS AND SPECIFICATIONS FOR SOIL EROSION AND SEDIMENT CONTROL

U.S. DEPARTMENT OF AGRICULTURE NATURAL RESOURCES CONSERVATION SERVICE	2011	MARYLAND DEPARTMENT OF ENVIRONMENT WATER MANAGEMENT ADMINISTRATION

DETAIL G-2-6 SEDIMENT BASIN SCHEMATIC HORIZONTAL DRAW-DOWN DEVICE

STANDARD SYMBOL

HDDD

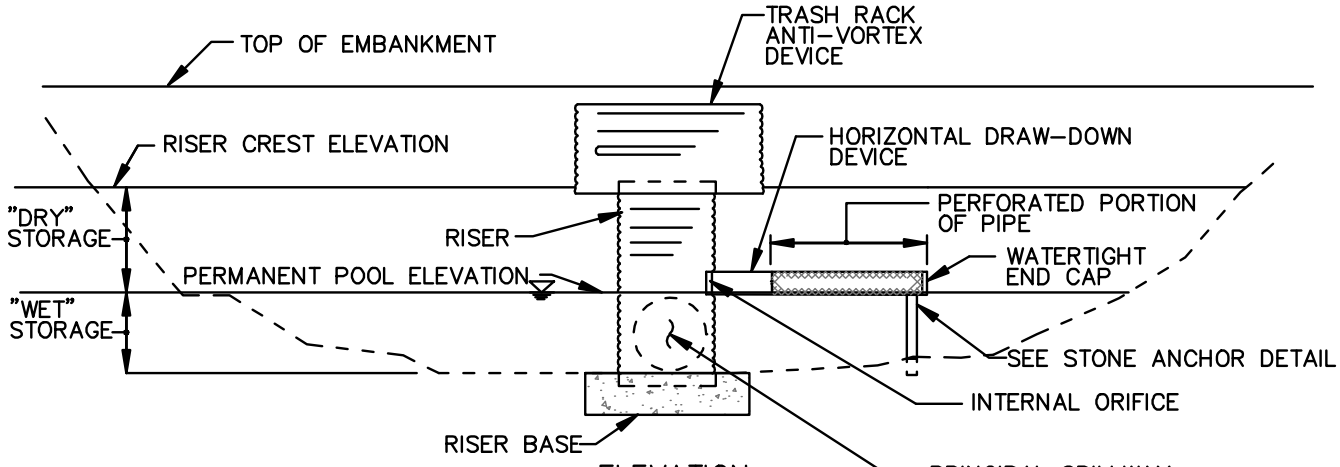

ELEVATION

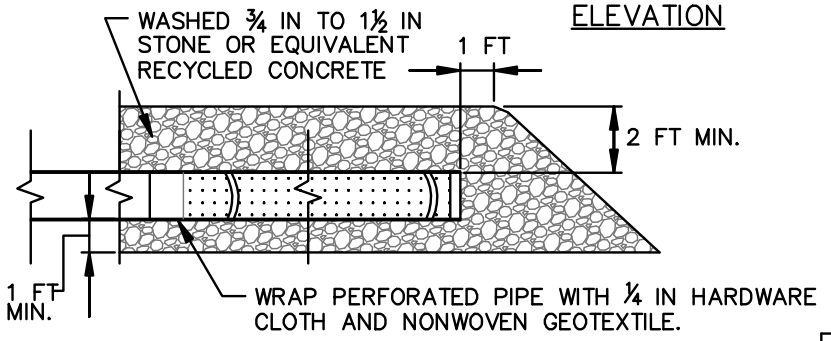

STONE ANCHOR DETAIL

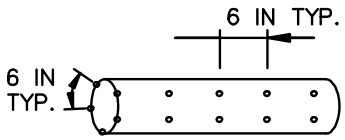

PERFORATION SPACING

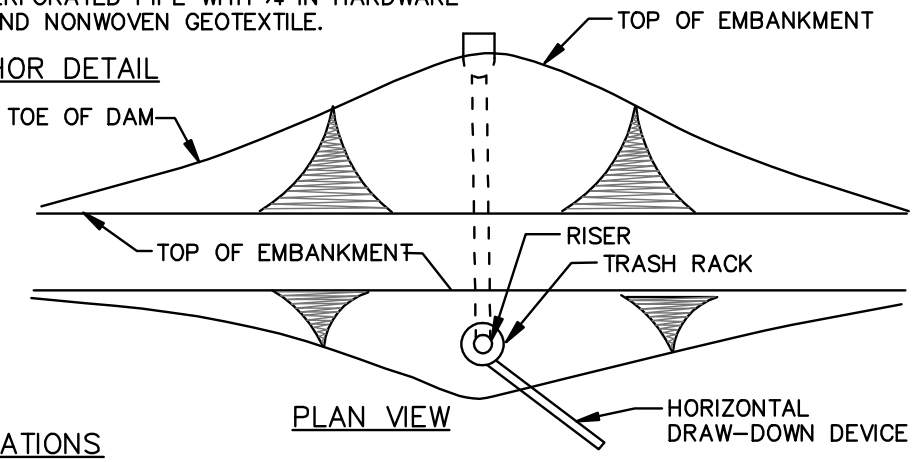

PLAN VIEW

NOTE: THIS DETAIL MAY BE USED WITH VARIOUS SPILLWAYS INCLUDING CMP RISERS, CONCRETE RISERS, AND WEIR WALLS.

CONSTRUCTION SPECIFICATIONS

1. PERFORATE PIPE WITH 1 INCH DIAMETER PERFORATIONS SPACED 6 INCHES APART LONGITUDINALLY AND RADIALLY OR IN ACCORDANCE WITH APPROVED PLAN.
2. WRAP THE PERFORATED PORTION OF THE DRAW-DOWN DEVICE FIRST WITH ¼ INCH GALVANIZED HARDWARE CLOTH, THEN WITH NONWOVEN GEOTEXTILE. USE NONWOVEN GEOTEXTILE AS SPECIFIED IN SECTION H-1 MATERIALS. DO NOT WRAP WITH MORE THAN ONE LAYER OF GEOTEXTILE.
3. AS AN ALTERNATE TO STONE ANCHORING, SECURE DRAW-DOWN DEVICE WITH TWO 1 INCH STEEL ANGLES SET 3 FEET MINIMUM INTO THE GROUND ATTACHED TO DRAW-DOWN DEVICE BY A 1 INCH WIDE GALVANIZED STEEL STRAP OR 12 GAUGE OR HEAVIER WIRE.
4. REMOVE SEDIMENT WHEN IT ACCUMULATES TO CLEANOUT ELEVATION (50% OF THE WET STORAGE DEPTH). DEPOSIT REMOVED SEDIMENT IN AN APPROVED AREA IN A SUCH A MANNER THAT IT WILL NOT ERODE. MAINTAIN WATER TIGHT CONNECTIONS. REPLACE GEOTEXTILE AROUND PERFORATED RISER IF DRY STORAGE VOLUME DOES NOT DRAW DOWN WITHIN 10 HOURS.

DETAIL G-2-7 SEDIMENT BASIN SCHEMATIC VERTICAL DRAW-DOWN DEVICE

STANDARD SYMBOL

VDDD

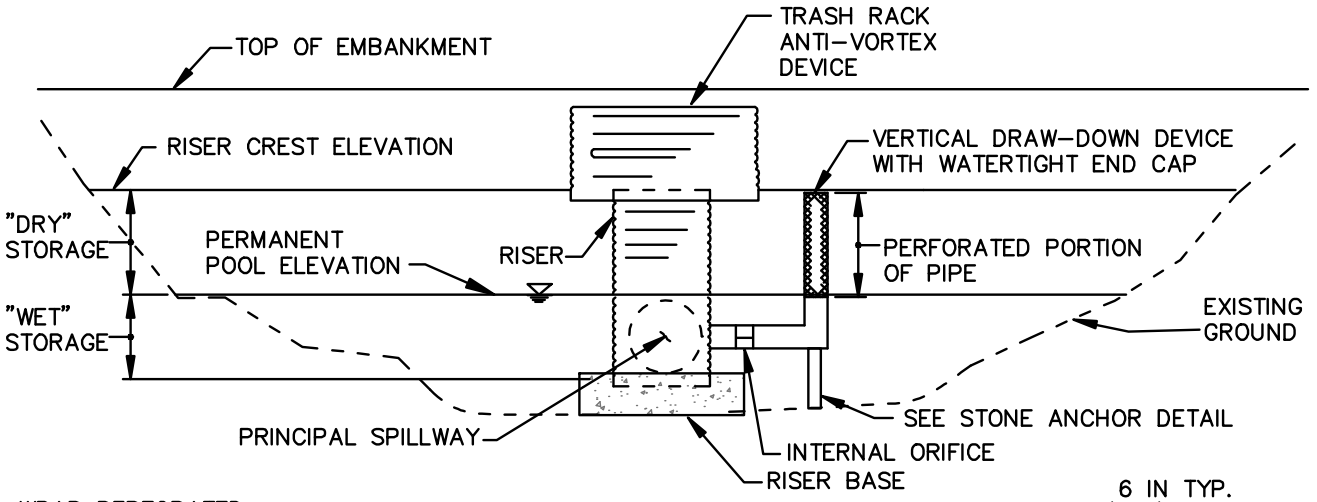

ELEVATION

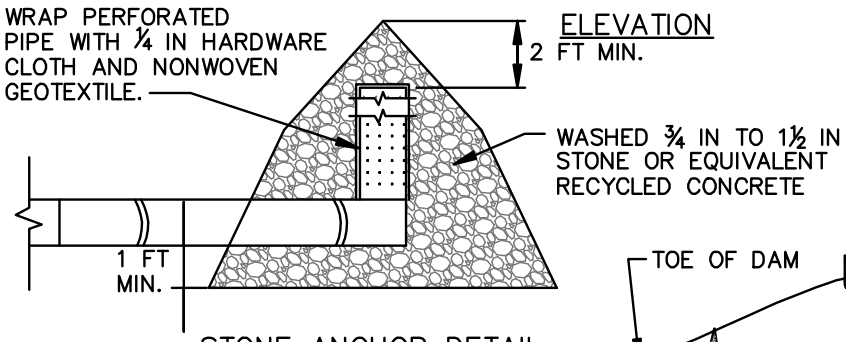

STONE ANCHOR DETAIL

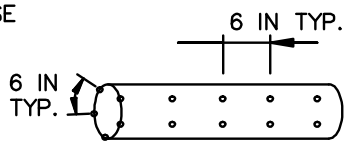

PERFORATION SPACING

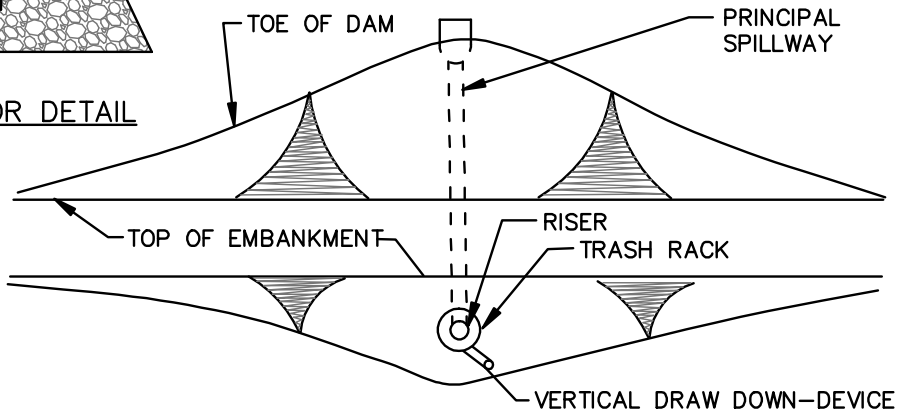

PLAN VIEW

NOTE: THIS DETAIL MAY BE USED WITH VARIOUS SPILLWAYS INCLUDING CMP RISERS, CONCRETE RISERS, AND WEIR WALLS.

CONSTRUCTION SPECIFICATIONS

1. PERFORATE PIPE WITH 1 INCH DIAMETER PERFORATIONS SPACED 6 INCHES APART LONGITUDINALLY AND RADIALLY OR IN ACCORDANCE WITH APPROVED PLAN.
2. DO NOT EXTEND PERFORATIONS IN THE DRAW-DOWN DEVICE INTO WET STORAGE.
3. WRAP THE PERFORATED PORTION OF THE DRAW-DOWN DEVICE FIRST WITH ¼ INCH GALVANIZED HARDWARE CLOTH, THEN WITH NONWOVEN GEOTEXTILE. USE NONWOVEN GEOTEXTILE AS SPECIFIED IN SECTION H-1 MATERIALS. DO NOT WRAP WITH MORE THAN ONE LAYER OF GEOTEXTILE.
4. AS AN ALTERNATE TO STONE ANCHORING, SECURE DRAW-DOWN DEVICE WITH TWO 1 INCH STEEL ANGLES SET 3 FEET MINIMUM INTO THE GROUND ATTACHED TO DRAW-DOWN DEVICE BY A 1 INCH WIDE GALVANIZED STEEL STRAP OR 12 GAUGE OR HEAVIER WIRE.
5. REMOVE SEDIMENT WHEN IT ACCUMULATES TO CLEANOUT ELEVATION (50% OF THE WET STORAGE DEPTH). DEPOSIT REMOVED SEDIMENT IN AN APPROVED AREA IN A SUCH A MANNER THAT IT WILL NOT ERODE. MAINTAIN WATER TIGHT CONNECTIONS. REPLACE GEOTEXTILE AROUND PERFORATED RISER IF DRY STORAGE VOLUME DOES NOT DRAW DOWN WITHIN 10 HOURS.

DETAIL G-2-8 PRECAST RISER CONNECTOR

STANDARD SYMBOL

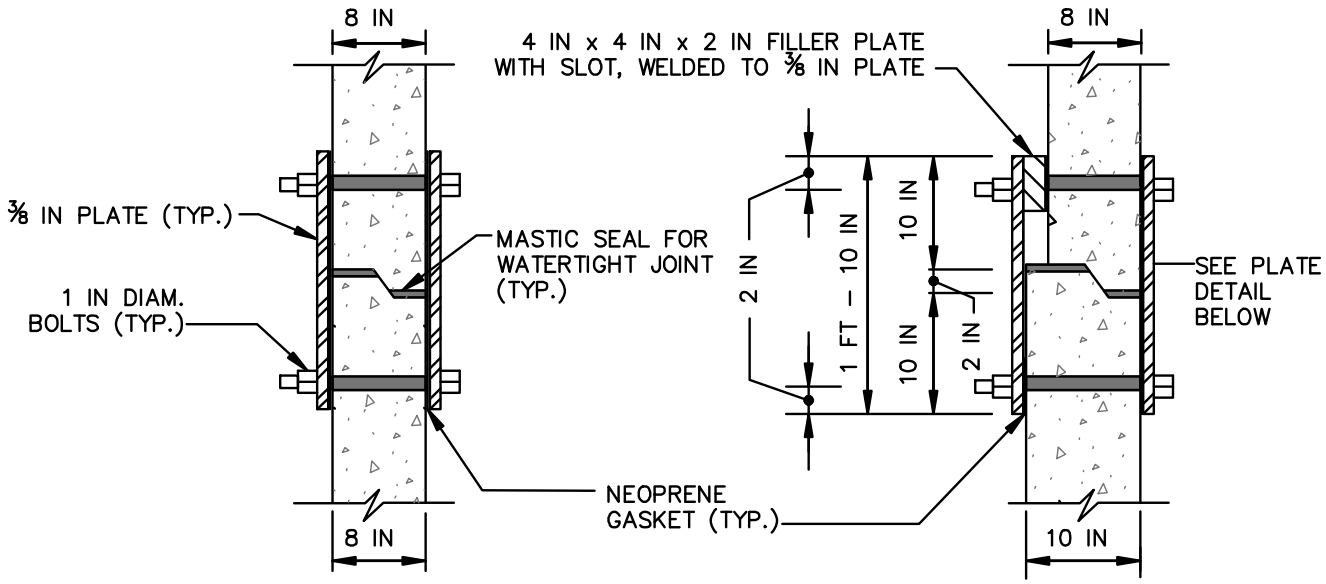

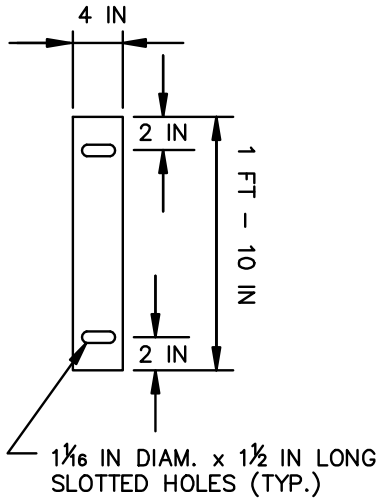

PLATE

CONSTRUCTION SPECIFICATIONS

1. FABRICATE PLATE CONNECTORS FROM STAINLESS STEEL CONFORMING TO ASTM A666–72, GRADE A OR B.
2. USE TYPE 304 STAINLESS STEEL FOR BOLTS.
3. PROVIDE CONNECTORS AT CENTERLINE OF EACH PRECAST BOX FACE. FOR MANHOLES PROVIDE FOUR PLATES SPACED AT 90°.

DETAIL G-2-9 PROJECTION COLLAR

STANDARD SYMBOL

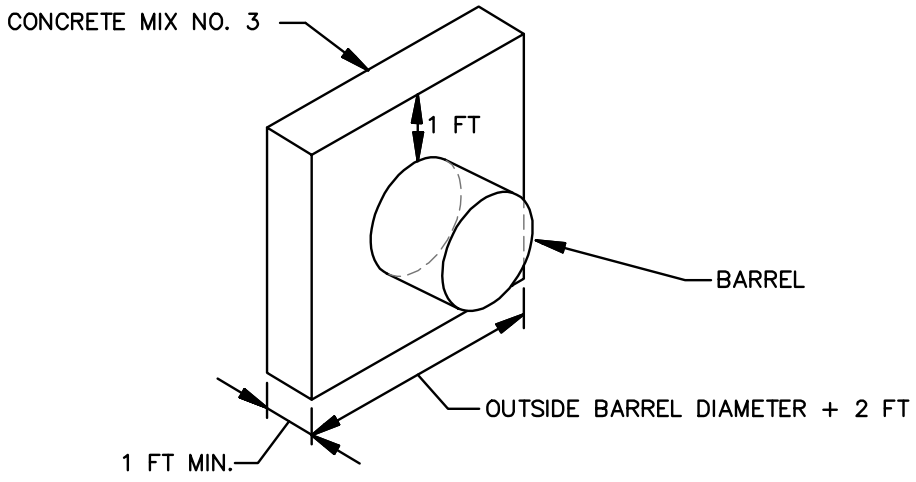

CONCRETE COLLAR DETAIL

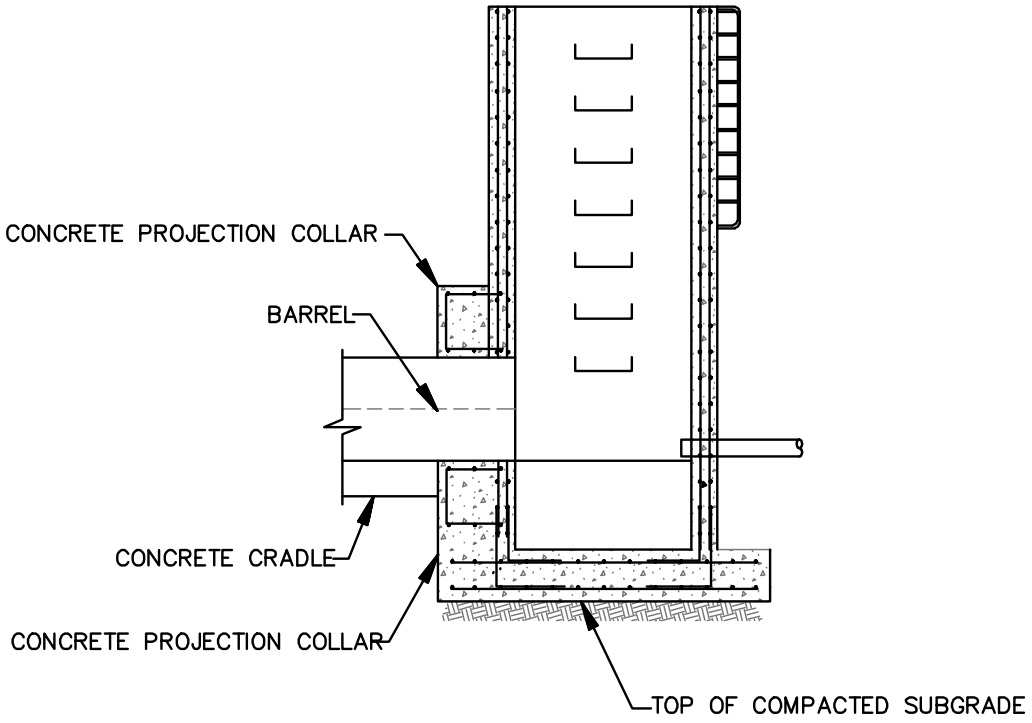

ELEVATION

CONSTRUCTION SPECIFICATIONS

1. CAST 1 FOOT THICK CONCRETE COLLAR TO OUTLET STRUCTURE WITH FOUR #4 U–SHAPED REBARS.

SECTION H – MISCELLANEOUS

H-1 STANDARDS AND SPECIFICATIONS

FOR

MATERIALS

Table H.1: Geotextile Fabrics

		WOVEN SLIT FILM GEOTEXTILE		WOVEN MONOFILAMENT GEOTEXTILE		NONWOVEN GEOTEXTILE	
		MINIMUM AVERAGE ROLL VALUE[1]					
PROPERTY	TEST METHOD	MD	CD	MD	CD	MD	CD
Grab Tensile Strength	ASTM D-4632	200 lb	200 lb	370 lb	250 lb	200 lb	200 lb
Grab Tensile Elongation	ASTM D-4632	15%	10%	15%	15%	50%	50%
Trapezoidal Tear Strength	ASTM D-4533	75 lb	75 lb	100 lb	60 lb	80 lb	80 lb
Puncture Strength	ASTM D-6241	450 lb		900 lb		450 lb	
Apparent Opening Size[2]	ASTM D-4751	U.S. Sieve 30 (0.59 mm)		U.S. Sieve 70 (0.21 mm)		U.S. Sieve 70 (0.21 mm)	
Permittivity	ASTM D-4491	0.05 sec^{-1}		0.28 sec^{-1}		1.1 sec^{-1}	
Ultraviolet Resistance Retained at 500 hours	ASTM D-4355	70% strength		70% strength		70% strength	

[1] All numeric values except apparent opening size (AOS) represent minimum average roll values (MARV). MARV is calculated as the typical minus two standard deviations. MD is machine direction; CD is cross direction.

[2] Values for AOS represent the average maximum opening.

Geotextiles must be evaluated by the National Transportation Product Evaluation Program (NTPEP) and conform to the values in Table H.1.

The geotextile must be inert to commonly encountered chemicals and hydrocarbons and must be rot and mildew resistant. The geotextile must be manufactured from fibers consisting of long chain synthetic polymers and composed of a minimum of 95 percent by weight of polyolefins or polyesters, and formed into a stable network so the filaments or yarns retain their dimensional stability relative to each other, including selvages.

When more than one section of geotextile is necessary, overlap the sections by at least one foot. The geotextile must be pulled taut over the applied surface. Equipment must not run over exposed fabric. When placing riprap on geotextile, do not exceed a one foot drop height.

Table H.2: Stone Size

TYPE	SIZE RANGE	d_{50}	d_{100}	AASHTO	MIDSIZE WEIGHT[3]
NUMBER 57[1]	3/8 to 1 ½ inch	½ in	1 ½ in	M-43	N/A
NUMBER 1	2 to 3 inch	2 ½ in	3 in	M-43	N/A
RIPRAP[2] (CLASS 0)	4 to 7 inch	5 ½ in	7 in	N/A	N/A
CLASS I	N/A	9 ½ in	15 in	N/A	40 lb
CLASS II	N/A	16 in	24 in	N/A	200 lb
CLASS III	N/A	23 in	34 in	N/A	600 lb

[1] This classification is to be used on the upstream face of stone outlets and check dams.

[2] This classification is to be used for gabions.

[3] Optimum gradation is 50 percent of the stone being above and 50 percent below the midsize.

Stone must be composed of a well graded mixture of stone sized so that fifty (50) percent of the pieces by weight are larger than the size determined by using the charts. A well graded mixture, as used herein, is defined as a mixture composed primarily of larger stone sizes but with a sufficient mixture of other sizes to fill the smaller voids between the stones. The diameter of the largest stone in such a mixture must not exceed the respective d_{100} selected from Table H.2. The d_{50} refers to the median diameter of the stone. This is the size for which 50 percent, by weight, will be smaller and 50 percent will be larger.

Note: Recycled concrete equivalent may be substituted for all stone classifications for temporary control measures only. Concrete broken into the sizes meeting the appropriate classification, containing no steel reinforcement, and having a minimum density of 150 pounds per cubic foot may be used as an equivalent.

Table H.3: Compost

Parameters[1]	Acceptable Range
pH	5.0 - 8.5
Moisture content	30% - 60%, wet weight basis
Organic matter content	25% - 65%, dry weight basis
Particle size	% passing a selected mesh size, dry weight basis 3 in (75 mm), 100% passing 1 in (25 mm), 90 – 100% passing 0.75 in (19 mm), 70 – 100% passing 0.25 in (6.4 mm), 30 – 60% passing 0.04 in (1 mm), 30% min. passing
Physical contaminants (manmade inerts)	<1% dry weight basis

Adapted from AASHTO Standards Specs for Compost Filter Socks and EPA Example Compost Filter Parameters.

[1] Recommended test methodologies are provided in Test Methods for the Examination of Composting and Compost (TMEC, The U.S Composting Council).

H-2 STANDARDS AND SPECIFICATIONS

FOR

SUBSURFACE DRAINS

Definition

A conduit, such as tile, pipe, or tubing, installed beneath the ground surface which intercepts, collects, and/or conveys drainage water.

Purpose

To serve one or more of the following purposes:

1. Improve the environment for vegetative growth by regulating the water table and groundwater flow.

2. Intercept and prevent water movement into a wet area.

3. Relieve artisan pressures.

4. Remove surface runoff.

5. Provide internal drainage of slopes to improve their stability and reduce erosion.

6. Provide internal drainage behind bulkheads, retaining walls, etc.

7. Replace existing subsurface drains that are interrupted or destroyed by construction operations.

Conditions Where Practice Applies

Subsurface drains are used in areas having a high water table or where subsurface drainage is required. The soil must have enough depth and permeability to permit installation of an effective system. This standard does not apply to storm drainage systems or foundation drains. An outlet for the drainage system must be available, either by gravity flow or by pumping. The outlet must be adequate for the quantity of water to be discharged without causing damage above or below the point of discharge and must comply with State and local laws.

Design Criteria

Base the design and installation on adequate surveys and on-site soils investigations.

1. Capacity of Drains: Determine the required capacity by one or more of the following:

    a. Where subsurface drainage is to be uniform over an area through a systematic pattern of drains, use a Drainage Coefficient of 1 inch.

    b. Where subsurface drainage is to be by a random interceptor system, use a minimum inflow rate of 0.5 cfs per 1000 feet of line to determine the required capacity. If actual field tests and measurements of flow amounts are available, they may be used for determining capacity. For interceptor subsurface drains on sloping land, increase the inflow rate as follows:

Land Slopes	**Increase Inflow Rate By**
2 to 5 percent	10 percent
5 to 12 percent	20 percent
Over 12 percent	30 percent

c. Additional design capacity must be provided if surface water is allowed to enter the system.

2. Size of Drains: Determine the size of subsurface drains from Figure H.1: Drain Chart – Corrugated Plastic Drain Tubing. The minimum subsurface drains size is 4 inches.

3. Depth and Spacing:

   a. Provide a minimum depth of cover on the subsurface drains of 24 inches where possible. The minimum depth of cover may be reduced to 15 inches where it is not possible to attain the 24 inch depth and where the drain is not subject to equipment loading or frost action. Roots from some types of vegetation can plug drains as the drains get closer to the surface.

   b. The spacing of drain laterals will be dependent on the permeability of the soil, the depth of installation of the drain and degree of drainage required. Generally, drains installed 36 inches deep and spaced 50 feet center-to-center will be adequate.

4. Minimum Velocity and Grade: The minimum grade for subsurface drains is 0.10 percent. Where surface water enters the system, use a velocity of not less than 2 feet per second to establish the minimum grades. Prevent debris or sediment from entering the system by means of filters.

5. Materials for Subsurface Drains:

   a. Acceptable subsurface drain materials include perforated, continuous closed joint conduits of polyethylene plastic, concrete, corrugated metal, asbestos-cement, bituminized fiber, and polyvinyl chloride.

   b. Meet the strength and durability requirements of the site.

6. Loading: Base the allowable loads on subsurface drain conduits on the trench and bedding conditions specified for the job. Use a factor of safety of not less than 1.5 when computing the maximum allowable depth of cover for a particular type of conduit.

7. Envelopes and Envelope Materials:

   a. Use envelopes around subsurface drains for proper bedding and to provide better flow into the conduit. Use a minimum of 3 inches of envelope material for the sand-gravel envelopes. Where necessary to improve the characteristics of flow of groundwater into the conduit, more envelope material may be required.

   b. Place envelope material to the height of the uppermost seepage strata. Behind bulkheads and retaining walls, go to within 12 inches of the top of the structure. This standard does not cover the design of filter materials where needed.

   c. Use materials for the envelopes that contain no materials which will cause an accumulation of sediment in the conduit or render the envelope unsuitable for bedding of the conduit. Provide envelope materials consisting of either geotextile or sand-gravel material with 100 percent passing a 1½ inch sieve, 90 to 100 percent passing a ¾ inch sieve, and not more than 10

percent passing a No. 60 sieve.

d. Use woven monofilament geotextile envelopes where 10 percent or more of the backfill material passes a No. 200 sieve. Place the envelope in such a manner that once the conduit is installed, it will be completely encased. For other soils use nonwoven geotextile.

e. Place and bed the conduit in a sand-gravel envelope. Place a minimum of 3 inches of envelope materials on the bottom of a conventional trench. Place the conduit on this and fill the trench completely with envelope material to a minimum depth of 3 inches above the conduit.

f. Stabilize soft or yielding soils under the drain where required and protect lines from settlement by adding gravel or other suitable material to the trench, by placing the conduit on plank or other rigid support, or by using long sections of perforated or watertight pipe with adequate strength to ensure satisfactory subsurface drain performance.

g. Where local regulations do not allow sand-gravel envelopes, follow the local design for type and size of envelope material.

8. Use of Heavy Duty Corrugated Plastic Drainage Tubing: Specify heavy duty corrugated drainage tubing where rocky or gravelly soils are expected to be encountered during installation operations. The quality of tubing will also be specified when cover over this tubing is expected to exceed 24 inches for 4, 5, 6, or 8 inch tubing. Larger size tubing designs will be handled on an individual job basis.

9. Auxiliary Structure and Subsurface Drain Protection:

a. Protect the outlet against erosion and undermining of the conduit, against damaging periods of submergence, and against entry of rodents or other animals into the subsurface drain. Install an animal guard on the outlet end of the pipe. Use a continuous 10 foot section of corrugated metal, cast iron, or steel pipe without perforations at the outlet end of the line and outlet 1.0 foot above the normal elevation of low flow in the outlet channel or above mean high tide in tidal areas. Do not provide envelope material around this 10 foot section of pipe.

b. Design conduits under roadways and embankments to be watertight and to withstand the expected loads.

c. Where surface water is to be admitted to subsurface drains, design the inlets to exclude debris and prevent sediment from entering the conduit. Design lines flowing under pressure to withstand the resulting pressures and velocity of flow. Use surface waterways where feasible.

d. Cap the upper end of each subsurface drain line with a tight fitting cap of the same material as the conduit or other durable material unless connected to a structure.

Maintenance

The point of discharge must be kept free of erosion and the animal guard at the outlet maintained.

Figure H.1: Drain Chart – Corrugated Plastic Drain Tubing

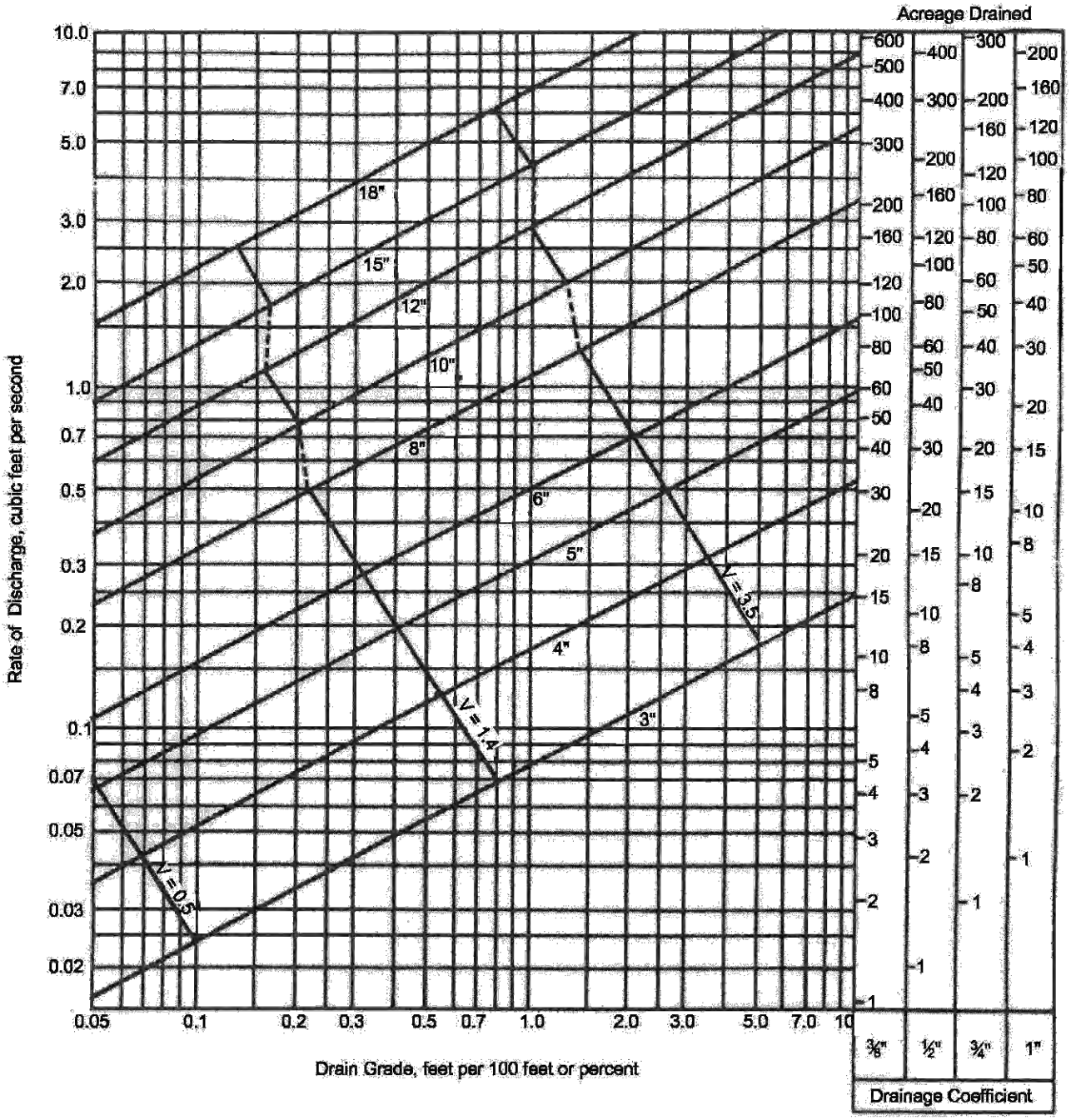

DETAIL H-2 SUBSURFACE DRAIN

STANDARD SYMBOL

SSD

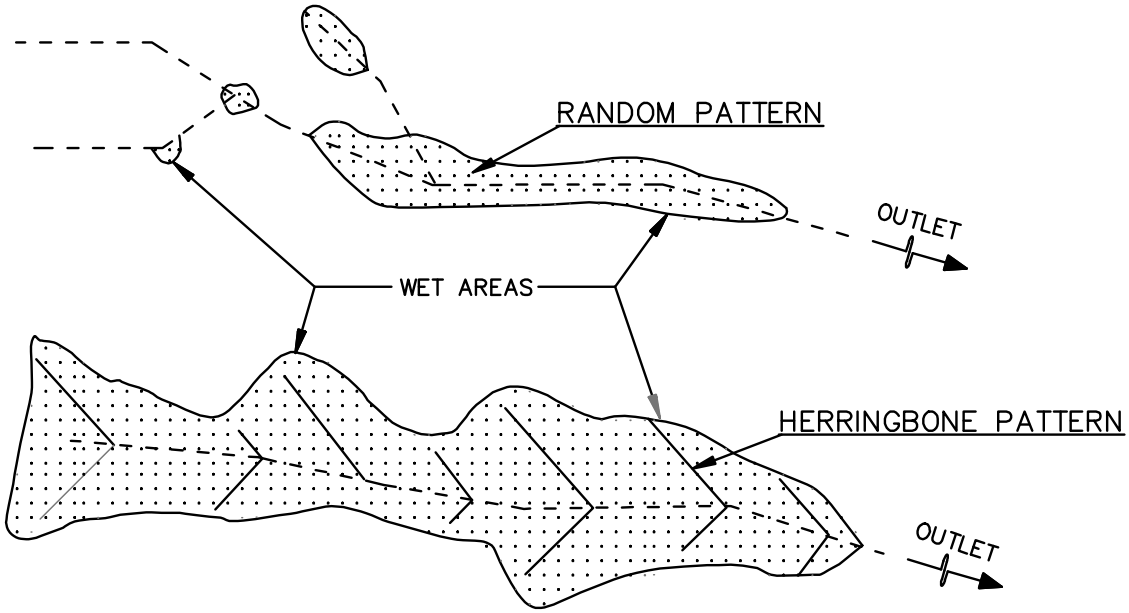

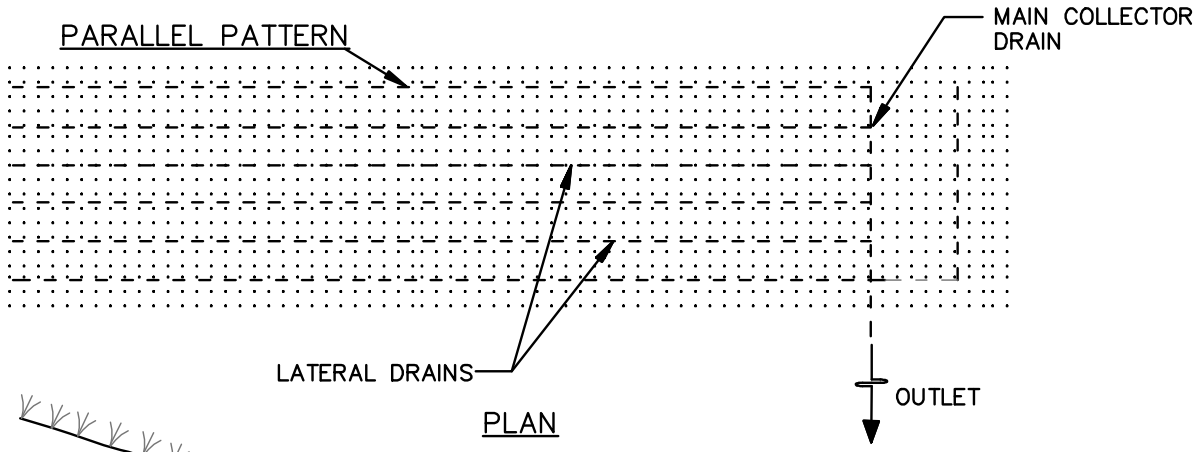

PLAN

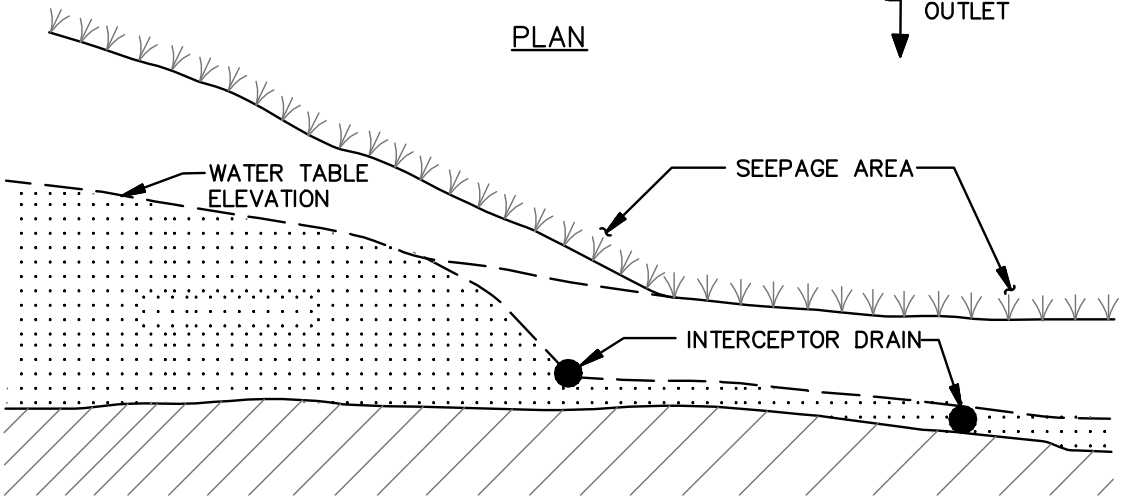

PROFILE

NOTE: AN MDE WETLANDS AND WATERWAYS PERMIT MAY BE REQUIRED

1 OF 2

MARYLAND STANDARDS AND SPECIFICATIONS FOR SOIL EROSION AND SEDIMENT CONTROL

U.S. DEPARTMENT OF AGRICULTURE NATURAL RESOURCES CONSERVATION SERVICE	2011	MARYLAND DEPARTMENT OF ENVIRONMENT WATER MANAGEMENT ADMINISTRATION

DETAIL H-2 SUBSURFACE DRAIN

STANDARD SYMBOL

|— — SSD — —|

CONSTRUCTION SPECIFICATIONS

1. DO NOT USE DEFORMED, WARPED, OR OTHERWISE DAMAGED PIPE OR TUBING.
2. LAY ALL SUBSURFACE DRAINS TO A UNIFORM LINE AND COVER WITH ENVELOPE MATERIAL. LAY THE PIPE TUBING WITH PERFORATIONS DOWN AND ORIENTED SYMMETRICALLY ABOUT THE VERTICAL CENTER LINE. MAKE CONNECTIONS WITH MANUFACTURED COUPLING DEVICES COMPARABLE IN STRENGTH WITH SPECIFIED PIPE OR TUBING UNLESS OTHERWISE SPECIFIED. USE METHOD OF PLACEMENT AND BEDDING AS SPECIFIED ON THE DRAWING.
3. PROVIDE ENVELOPE MATERIAL CONSISTING OF WOVEN MONOFILAMENT GEOTEXTILE OR A SAND/GRAVEL MIXTURE WITH 100 PERCENT PASSING THE 1½ INCH SIEVE, 90 TO 100 PERCENT PASSING THE ¾ INCH SIEVE, AND NOT MORE THAN 10 PERCENT PASSING THE NUMBER 60 SIEVE.
4. USE WOVEN MONOFILAMENT GEOTEXTILE AS SPECIFIED IN SECTION H–1 MATERIALS.
5. CAP THE UPPER END OF EACH SUBSURFACE DRAINLINE WITH A TIGHT FITTING CAP OF THE SAME MATERIAL AS THE CONDUIT OR OTHER DURABLE MATERIAL UNLESS CONNECTED TO A STRUCTURE.
6. USE A CONTINUOUS 10 FOOT SECTION OF CORRUGATED METAL, CAST IRON, OR STEEL PIPE WITHOUT PERFORATIONS AT THE OUTLET END OF THE LINE WITH NO ENVELOPE MATERIAL AROUND THE 10 FOOT SECTION PIPE. INSTALL AN ANIMAL GUARD ON THE OUTLET END OF THE PIPE.
7. PLACE EARTH BACKFILL MATERIAL IN THE TRENCH IN SUCH A MANNER THAT DISPLACEMENT OF THE DRAIN WILL NOT OCCUR.
8. WHERE SURFACE WATER IS ENTERING THE SYSTEM, PROVIDE A SWING TYPE TRASH AND ANIMAL GUARD AT THE PIPE OUTLET SECTION OF THE SYSTEM.
9. KEEP POINT OF DISCHARGE FREE OF EROSION. MAINTAIN ANIMAL GUARD AT OUTLET.

H-3 STANDARDS AND SPECIFICATIONS

FOR

CHANNEL

Definition

An open drainage conveyance lined with vegetation, riprap, gabions, concrete or other approved material.

Purpose

To convey concentrated runoff in a non-erosive manner.

Conditions Where Practice Applies

A channel is used when permanent conveyance of runoff is necessary. A channel lined with concrete should be considered only after all other design options have been deemed infeasible.

Design Criteria

1. Capacity: The channel must have a minimum capacity to adequately convey the peak rate of runoff from the 10-year, 24-hour storm.

   Use the following Manning's coefficient of roughness (n):

Lined Material	**Manning's n**
Grass with soil stabilization matting for	
$d \leq 6$ inches	0.060
$d > 6$ inches	0.040
Concrete (type):	
Trowel Finish	0.015
Float Finish	0.019
Gunite	0.019
Riprap	Determine from Figure H.2
Gabion	0.030

2. Velocity: The maximum allowable design velocity for type of channel lining is shown in Table H.4.

Table H.4: Maximum Velocities for Channels

Channel Lining	Maximum Velocity (fps)
Seed and mulch	2.5
Solid sodding	4.0
Temporary soil stabilization matting over seed and mulch	6.0
Grass with permanent soil stabilization matting	8.5
Riprap	Refer to Figures D.2 and D.3
Gabion	Unlimited
Concrete	Unlimited

3. Cross-Section: Cross-sections should be triangular, parabolic, or trapezoidal in shape. Monolithic concrete or gabions may be rectangular.

4. Freeboard: The lined section must extend up the side slopes to a minimum of 0.25 feet above the design depth. The side slopes above the permanent lining must be vegetated or otherwise stabilized and extend a minimum of 0.25 feet above the top of the lining.

5. Side Slopes and Lining Thickness: Steepest permissible side slopes, horizontal to vertical (H:V), and minimum lining thicknesses are as follows:

Table H.5: Steepest Permissible Side Slopes and Minimum Lining Thickness

Channel Type	Side Slopes	Minimum Lining Thickness
Non-reinforced concrete Hand-placed, formed concrete Heights of lining, 1½ feet or less	Vertical	4 inches
Non-reinforced concrete Hand-placed, screened concrete or mortared in place flagstone Height of lining, less than 2 feet Height of lining, more than 2 feet	 1:1 2:1	4 inches
Slip Form Concrete Height of lining, less than 2 feet	1:1	4 inches
Riprap	2:1	1½ times max. stone size plus thickness of filter or bedding
Gabion	Per manufacturer specifications	Per manufacturer specifications
Permanent soil stabilization matting	2:1	Per manufacturer specifications

6. Related Structures: Design side inlets, drop structures, and energy dissipaters to meet the hydraulic and structural requirements of the site.

7. Filters or Bedding: Provide for filters or bedding to prevent piping, reduce uplift pressure, and collect water as required and in accordance with sound engineering design. Provide weep holes and drains as needed.

8. Concrete:

   a. Specify the proportion of concrete to be used for lining so that it is plastic enough for thorough consolidation and stiff enough to stay in place on side slopes. A dense durable product will be required. A mix that can be certified as suitable to produce a minimum strength of at least 3,000 pounds per square inch is required. Use Portland cement, Type I, II, IV, or V with an aggregate having a maximum diameter of 1½ inches.

   b. Provide weep holes in concrete footings and retaining walls to allow free drainage of water. Use non-corrosive pipe for the weep holes.

9. Mortar: Use mortar consisting of a mix of cement, sand, and water with a water-cement ratio of not more than 6 gallons of water per bag of cement for placement of flagstone.

10. Construction Joints: Allow for form construction joints in concrete linings, where required, transversely to a depth of about ⅓ the thickness of the lining at a uniform spacing in the range of 10 to 15 feet.

11. Rock Riprap: Provide stone used for riprap or gabions of a density and hardness to withstand exposure to air, water, freezing, and thawing.

12. Cutoff Walls: Use cutoff walls at the beginning and ending of concrete lining and for rock riprap lining, and key into the channel bottom at both ends of the lining.

13. Gabion Baskets: Fabricate gabions in such a manner that the sides, ends, and lid can be assembled at the site into rectangular baskets of similar size. Install gabion baskets according to the manufacturer specifications.

14. Geotextile: Provide for nonwoven geotextile beneath all riprap and gabions.

Construction Specifications

1. Clear the foundation area of trees, stumps, roots, sod, loose rock, or other objectionable material.

2. Excavate the cross-section to the lines and grades as shown on the plans. Backfill over-excavated areas with moist soil compacted to the density of the surrounding material.

3. Construct the grade or horizontal alignment of the lined channel as per the plans.

4. Place concrete linings to the thickness shown on the plans and finish in a professional manner. Protect freshly placed concrete from freezing or extremely high temperatures to ensure proper curing.

5. Place filter, bedding, and riprap to line and grade in the manner specified.

6. Construct channels in such a manner that erosion, air, and water pollution will be minimized and held within legal limits. The completed job will have a professional appearance. Vegetate all disturbed areas or otherwise protect against soil erosion.

Maintenance

The line, grade, and cross section must be maintained. Maintain the lining as designed to prevent undermining and deterioration. Positive drainage must be maintained. Accumulated sediment and debris must be removed. The channel and the point of discharge must be kept free of erosion.

Figure H.2: Determining "n" for Riprap Lined Channel using Depth of Flow

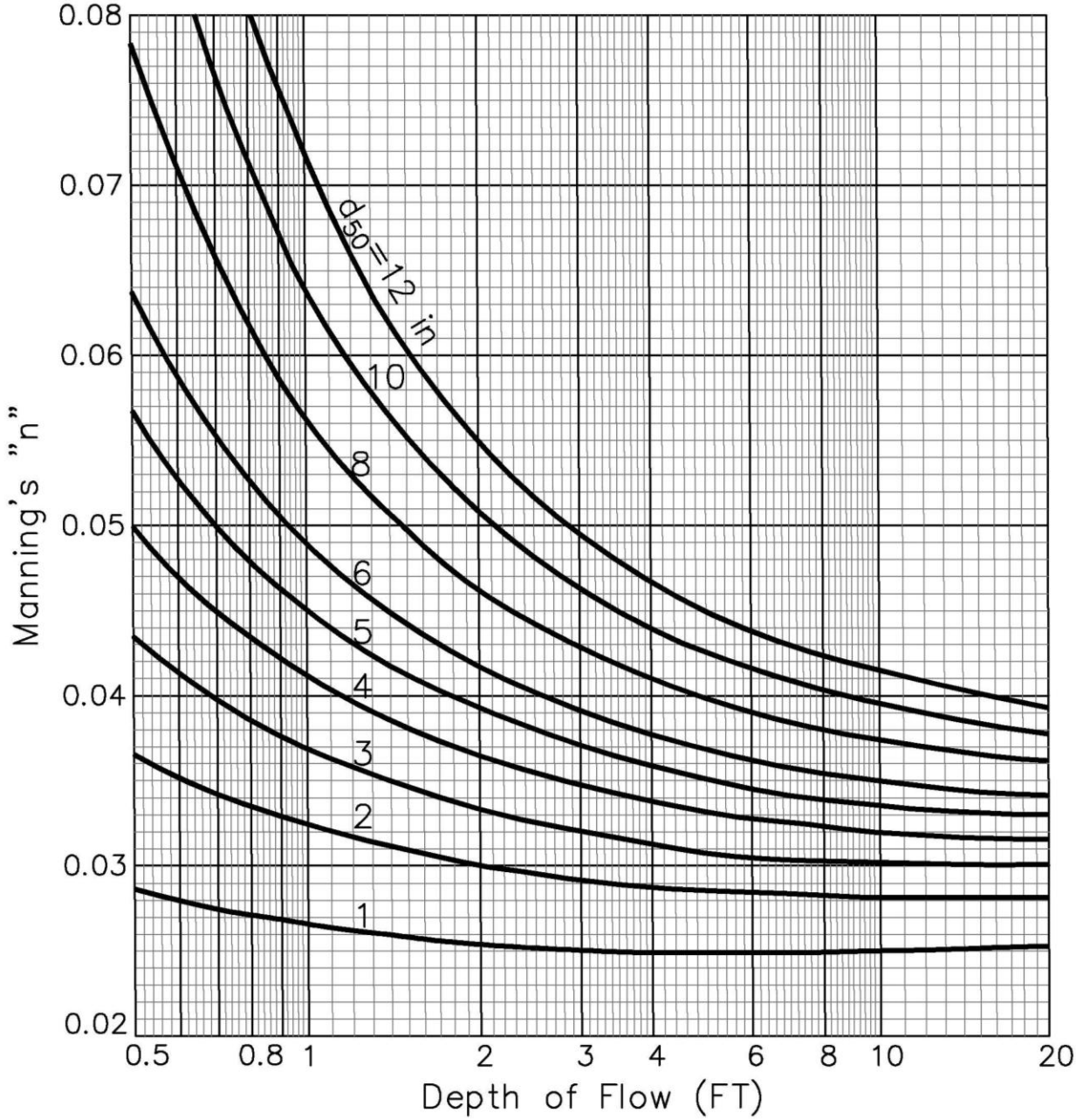

$$n = \frac{y^{1/8}}{[21.6\log_{10}(y/d_{50}) + 14.0]}$$

(y =Depth of Flow)

H-4 STANDARDS AND SPECIFICATIONS

FOR

TEMPORARY ACCESS WATERWAY CROSSINGS

Definition

A structure placed across a waterway to provide access for construction purposes for a period of less than one year. Temporary access crossings are not to be utilized to maintain traffic for the general public.

Purpose

To provide safe, pollution free access across a waterway for construction equipment by establishing minimum standards and specifications for the design, construction, maintenance, and removal of the structure. A temporary access waterway crossing is necessary to prevent construction equipment from damaging the waterway, blocking fish migration, and tracking sediment and other pollutants into the waterway. A waterway crossing may create a channel constriction, thus the **temporary** nature of waterway access crossings must be stressed. The crossing should be in place for the shortest practical period of time and removed as soon as its function is completed.

Conditions Where Practice Applies

Temporary waterway crossings must conform to the technical requirements of these Standards and Specifications as well as any specific requirements imposed by the MDE Wetlands and Waterways Program. The designs are based on waterway geometry rather than the drainage area contributing to the point of crossing. The principal consideration of these Standards and Specifications is erosion and sediment control. Structural integrity and safety for expected loading must also be considered when designing temporary access waterway crossings. The two types of standard temporary waterway crossings are bridges and culverts. Bridges are preferable.

Design Criteria

1. Stream Closures: The stream channel must not be disturbed during restricted time periods. Stream closure dates for fish spawning or migration within waterways are as follows:

Use I and IP	March 1 - June 15
Use II	June 1 - September 30 and December 16 - March 14
Use III and IIIP	October 1 - April 30
Use IV	March 1 - May 31
SAV*	April 1 - October 15

***** Submerged Aquatic Vegetation (SAV)

For more information about the closures based on stream uses and SAVs contact MDE Wetlands and Waterways Program.

2. Aquatic Migration: Fish passage must not be obstructed by the installation of a waterway crossing. Bridges pose the least potential for creating barriers to aquatic migration. The construction of a waterway crossing must not cause a significant water level difference between the upstream and downstream water surface elevations.

3. Site Location: Locate the temporary crossing where there will be the least disturbance to the existing waterway banks and approaches. When possible, locate the crossing at a point receiving minimal surface runoff. Consider the effort that will be required to restore the area after the temporary crossing is removed.

4. Crossing Alignment: The temporary waterway crossing should be at right angles to the stream, unless the approach conditions dictate otherwise.

5. Approaches: The centerline of both approaches needs to coincide with the centerline of the crossing for a minimum distance of 50 feet from the top of each stream bank, unless precluded by physical or right-of-way constraints. The approaches should be kept as close to the existing grade as possible. Approaches should have a minimum width of 12 feet and a maximum width of 20 feet depending on the size of the vehicles that will use the crossing.

6. Surface Runoff: Runoff on the approaches must be at a non-erosive velocity. This can be attained through surface stabilization or surface runoff diversion. Surface runoff from unstabilized approaches must discharge to an approved sediment control device.

7. Removal: After the temporary crossing is no longer needed, remove it within 14 calendar days unless within the use designation stream closure period.

H-4-1 STANDARDS AND SPECIFICATIONS

FOR

TEMPORARY ACCESS BRIDGE

Definition

A temporary waterway crossing that spans the stream channel.

Design Considerations

Generally, a temporary access bridge causes less disturbance to the waterway bed and banks and poses less interference with fish migration than a culvert access crossing.

Time-of-year restrictions do not apply to the construction or removal of a temporary access bridge unless there is disturbance to the stream channel.

Maintenance

The approach to the bridge must be stabilized and kept free of erosion. The decking and curbs must be cleaned of sediment daily by scraping, sweeping, and/or vacuuming. The decking and curbs must remain tightly butted without gaps. Debris trapped by the bridge must be removed. The areas adjacent to the crossing must be maintained to continuously meet the requirements for Adequate Vegetative Establishment in accordance with Section B-4 Vegetative Stabilization.

DETAIL H-4-1 TEMPORARY ACCESS BRIDGE

STANDARD SYMBOL

TB

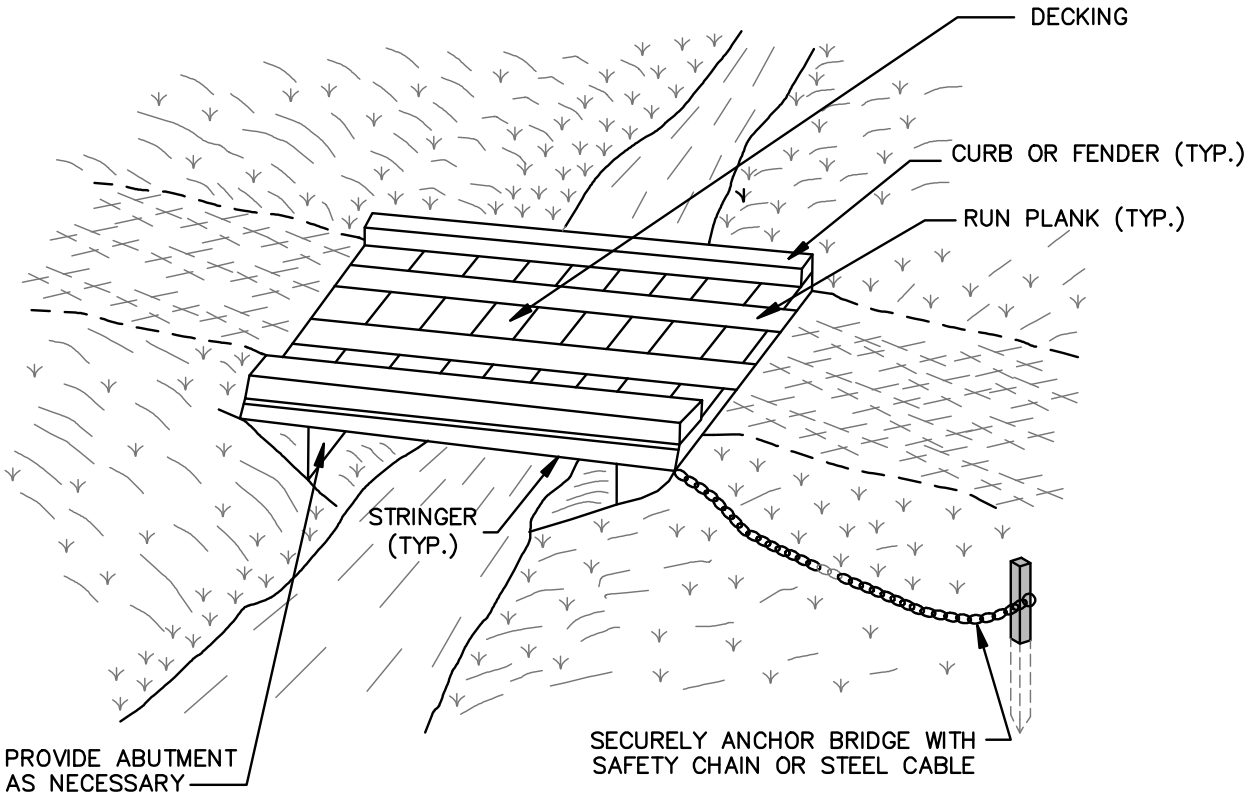

LOCATION PLAN

NOTE:

TIME OF YEAR RESTRICTIONS DO NOT APPLY TO THE CONSTRUCTION OR REMOVAL OF A TEMPORARY ACESS BRIDGE UNLESS THERE IS DISTURBANCE TO THE STREAM CHANNEL.

1 OF 2

DETAIL H-4-1 TEMPORARY ACCESS BRIDGE

STANDARD SYMBOL

TB

CONSTRUCTION SPECIFICATIONS

1. CONSTRUCT TEMPORARY BRIDGE STRUCTURE AT OR ABOVE THE BANK ELEVATION TO PREVENT IMPACTS FROM FLOATING MATERIALS AND DEBRIS.

2. PLACE ABUTMENTS PARALLEL TO, AND ON, STABLE BANKS.

3. CONSTRUCT BRIDGE TO SPAN ENTIRE CHANNEL UNLESS OTHERWISE INDICATED ON APPROVED PLAN.

4. USE STRINGERS CONSISTING OF LOGS, SAWN TIMBER, PRESTRESSED CONCRETE BEAMS, METAL BEAMS, OR OTHER APPROVED MATERIALS.

5. SELECT DECKING MATERIALS TO PROVIDE SUFFICIENT STRENGTH TO SUPPORT THE ANTICIPATED LOAD. PLACE ALL DECKING MEMBERS PERPENDICULAR TO THE STRINGERS, BUTT TIGHTLY, AND SECURELY FASTEN. DECKING MATERIALS MUST BE BUTTED TIGHTLY TO PREVENT ANY SOIL MATERIAL TRACKED ONTO THE BRIDGE FROM FALLING INTO THE WATERWAY BELOW.

6. SECURELY FASTEN OPTIONAL RUN PLANKING FOR THE LENGTH OF THE SPAN. PROVIDE A RUN PLANK FOR EACH TRACK OF THE EQUIPMENT WHEELS. ALTHOUGH RUN PLANKS ARE OPTIONAL, THEY MAY BE NECESSARY TO PROPERLY DISTRIBUTE LOADS.

7. INSTALL CURBS THE ENTIRE LENGTH OF THE OUTER SIDES OF THE DECK TO PREVENT SEDIMENT FROM ENTERING THE STREAM CHANNEL.

8. ANCHOR BRIDGE SECURELY AT ONLY ONE END USING STEEL CABLE OR CHAIN. ANCHORING AT ONLY ONE END WILL PREVENT CHANNEL OBSTRUCTION IN THE EVENT THAT FLOODWATERS FLOAT THE BRIDGE. ACCEPTABLE ANCHORS ARE LARGE TREES, LARGE BOULDERS, OR DRIVEN STEEL POSTS. ANCHOR MUST BE SUFFICIENT TO PREVENT THE BRIDGE FROM FLOATING DOWNSTREAM.

9. AREAS DISTURBED DURING BRIDGE INSTALLATION AND\OR REMOVAL MUST NOT BE LEFT UNSTABILIZED OVERNIGHT UNLESS THE RUNOFF IS DIRECTED TO AN APPROVED SEDIMENT CONTROL DEVICE.

10. STABILIZE APPROACH TO BRIDGE AND KEEP FREE OF EROSION. CLEAN SEDIMENT FROM DECKING AND CURBS DAILY BY SCRAPING, SWEEPING, AND/OR VACUUMING. ENSURE THAT DECKING AND CURBS REMAIN TIGHTLY BUTTED WITHOUT GAPS. REMOVE DEBRIS TRAPPED BY BRIDGE. MAINTAIN AREAS ADJACENT TO CROSSING TO CONTINUOUSLY MEET REQUIREMENTS FOR ADEQUATE VEGETATIVE ESTABLISHMENT IN ACCORDANCE WITH SECTION B–4 VEGETATIVE STABILIZATION.

11. AFTER THE TEMPORARY CROSSING IS NO LONGER NEEDED, REMOVE IT WITHIN 14 CALENDAR DAYS. IF SUBJECT TO THE USE DESIGNATION CLOSURE, REMOVE AT THE END OF CLOSURE PERIOD. PROTECT STREAM BANKS DURING BRIDGE REMOVAL AND STABILIZE ALL DISTURBED AREAS WITH EROSION CONTROL MATTING. ACCOMPLISH REMOVAL OF THE BRIDGE AND CLEAN UP OF THE AREA WITHOUT CONSTRUCTION EQUIPMENT WORKING IN THE WATERWAY CHANNEL. STORE ALL REMOVED MATERIALS IN AN APPROVED STAGING AREA.

H-4-2 STANDARDS AND SPECIFICATIONS

FOR

TEMPORARY ACCESS CULVERT

Definition

A waterway crossing consisting of circular pipe(s) and aggregate.

Design Criteria

1. Temporary culverts are used where the channel is too wide for a single span bridge or the anticipated loading may prove unsafe. The culvert type and cross sectional area must be strong enough to support the maximum expected load.

2. Size the pipe(s) to convey the normal stream flow. The cross-sectional area of the culvert must be greater than 60 percent of the cross-sectional area of the existing bankfull channel. Size the culvert for the largest pipe diameters that will fit into the existing waterway channel without excavation of the channel or without major approach fills. The minimum pipe diameter that may be used is 12 inches.

3. Time-of-year restrictions apply to the construction or removal of a temporary access culvert.

Maintenance

The approach to the access culvert must be stabilized and kept free of erosion. Displaced stone must be replaced, and high flow areas must be maintained. Debris trapped by the culvert must be removed. Damaged pipe(s) must be replaced. The areas adjacent to the crossing must be maintained to continuously meet the requirements for Adequate Vegetative Establishment in accordance with Section B-4 Vegetative Stabilization.

DETAIL H-4-2 TEMPORARY ACCESS CULVERT

STANDARD SYMBOL

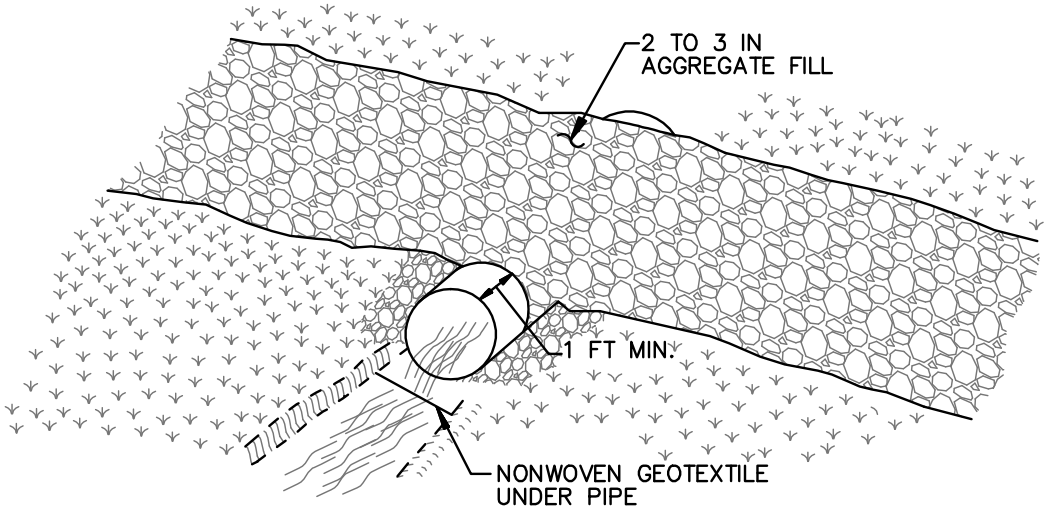

PLAN

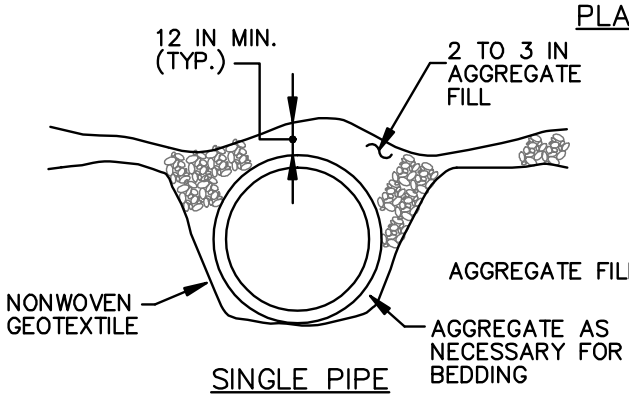

SINGLE PIPE

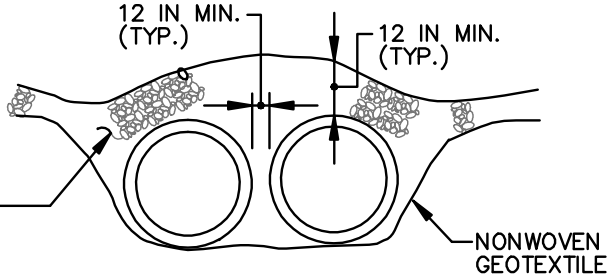

DUAL PIPES

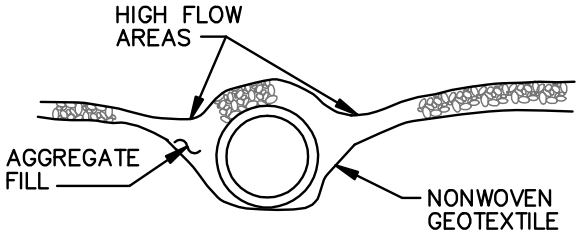

SINGLE PIPE

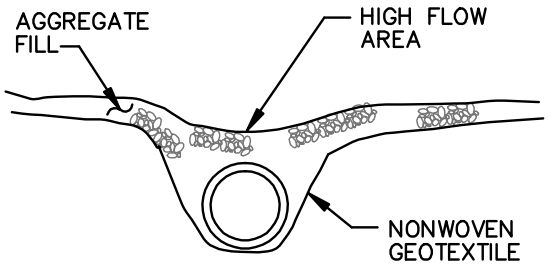

SINGLE PIPE

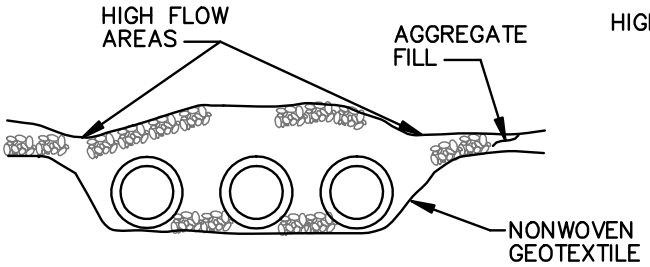

MULTIPLE PIPES

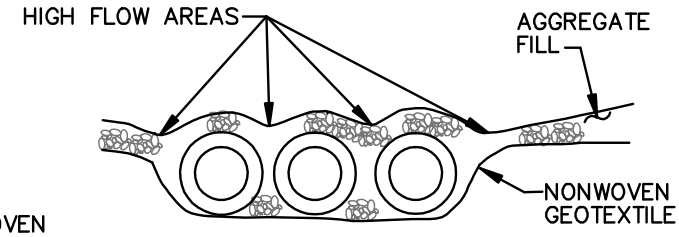

MULTIPLE PIPES

1 OF 2

MARYLAND STANDARDS AND SPECIFICATIONS FOR SOIL EROSION AND SEDIMENT CONTROL

U.S. DEPARTMENT OF AGRICULTURE NATURAL RESOURCES CONSERVATION SERVICE	2011	MARYLAND DEPARTMENT OF ENVIRONMENT WATER MANAGEMENT ADMINISTRATION

DETAIL H-4-2 TEMPORARY ACCESS CULVERT

STANDARD SYMBOL

TAC

CONSTRUCTION SPECIFICATIONS

1. CONSTRUCTION OR REMOVAL OF A TEMPORARY ACCESS CULVERT WILL NOT BE PERMITTED DURING THE FOLLOWING PERIODS:

USE I AND IP	MARCH 1 – JUNE 15
USE II	JUNE 1 – SEPTEMBER 30 AND DECEMBER 16 – MARCH 14
USE III AND IIIP	OCTOBER 1 – APRIL 30
USE IV	MARCH 1 – MAY 31
SAV* (ALL FLOWING STREAMS)	APRIL 15 – OCTOBER 15

*SUBMERGED AQUATIC VEGETATION

2. EXTEND THE CULVERT(S) A MINIMUM OF ONE FOOT BEYOND THE UPSTREAM AND DOWNSTREAM TOE OF THE AGGREGATE PLACED AROUND THE CULVERT.

3. PLACE NONWOVEN GEOTEXTILE ON THE STREAM BED AND STREAM BANKS PRIOR TO PLACEMENT OF THE PIPE CULVERT(S) AND AGGREGATE. COVER THE STREAM BED WITH THE GEOTEXTILE AND EXTEND IT A MINIMUM SIX INCHES AND A MAXIMUM OF ONE FOOT BEYOND THE END OF THE CULVERT AND BEDDING MATERIAL. USE NONWOVEN GEOTEXTILE AS SPECIFIED IN SECTION H–1 MATERIALS. GEOTEXTILE REDUCES SETTLEMENT AND IMPROVES CROSSING STABILITY.

4. PLACE CULVERT(S) ON THE NATURAL STREAM BED GRADE TO MINIMIZE INTERFERENCE WITH FISH PASSAGE.

5. COVER THE CULVERT WITH A MINIMUM OF ONE FOOT OF WASHED AGGREGATE. FOR MULTIPLE CULVERTS PROVIDE AT LEAST 12 INCHES OF COMPACTED AGGREGATE FILL BETWEEN CULVERTS.

6. STABILIZE ALL AREAS DISTURBED DURING CULVERT INSTALLATION WITHIN 24 HOURS OF THE DISTURBANCE IN ACCORDANCE WITH STANDARDS FOR PERMANENT STABILIZATION, SECTION B–4–5, OR TEMPORARY STABILIZATION, SECTION B–4–4, AS APPLICABLE.

7. STABILIZE APPROACH TO CROSSING AND KEEP FREE OF EROSION. REPLACE DISPLACED STONE, AND MAINTAIN HIGH FLOW AREAS. REMOVE DEBRIS TRAPPED BY CULVERT. REPLACE DAMAGED PIPE(S). MAINTAIN AREAS ADJACENT TO CROSSING TO CONTINUOUSLY MEET REQUIREMENTS FOR ADEQUATE VEGETATIVE ESTABLISHMENT IN ACCORDANCE WITH SECTION B–4 VEGETATIVE STABILIZATION.

8. AFTER THE TEMPORARY CROSSING IS NO LONGER NEEDED, REMOVE IT WITHIN 14 CALENDAR DAYS. IF SUBJECT TO THE USE DESIGNATION CLOSURE, REMOVE AT THE END OF CLOSURE PERIOD. PROTECT STREAM BANKS DURING CULVERT REMOVAL AND STABILIZE ALL DISTURBED AREAS WITH EROSION CONTROL MATTING. ACCOMPLISH REMOVAL OF THE CULVERT AND CLEAN UP OF THE AREA WITHOUT CONSTRUCTION EQUIPMENT WORKING IN THE WATERWAY CHANNEL. STORE ALL REMOVED MATERIALS IN AN APPROVED STAGING AREA.

H-5 STANDARDS AND SPECIFICATIONS

FOR

DUST CONTROL

Definition

Controlling the suspension of dust particles from construction activities.

Purpose

To prevent blowing and movement of dust from exposed soil surfaces to reduce on and off-site damage including health and traffic hazards.

Conditions Where Practice Applies

Areas subject to dust blowing and movement where on and off-site damage is likely without treatment.

Specifications

1. Mulches: See Section B-4-2 Soil Preparation, Topsoiling, and Soil Amendments, Section B-4-3 Seeding and Mulching, and Section B-4-4 Temporary Stabilization. Mulch must be anchored to prevent blowing.

2. Vegetative Cover: See Section B-4-4 Temporary Stabilization.

3. Tillage: Till to roughen surface and bring clods to the surface. Begin plowing on windward side of site. Chisel-type plows spaced about 12 inches apart, spring-toothed harrows, and similar plows are examples of equipment that may produce the desired effect.

4. Irrigation: Sprinkle site with water until the surface is moist. Repeat as needed. The site must not be irrigated to the point that runoff occurs.

5. Barriers: Solid board fences, silt fences, snow fences, burlap fences, straw bales, and similar material can be used to control air currents and soil blowing.

6. Chemical Treatment: Use of chemical treatment requires approval by the appropriate plan review authority.

H-6 STANDARDS AND SPECIFICATIONS

FOR

ONSITE CONCRETE WASHOUT STRUCTURE

Definition

A prefabricated or fabricated container used for containing wash water from rinsing out concrete trucks, drums, pumps, chutes, other equipment, and concrete truck exteriors.

Purpose

To promote proper disposal of waste concrete and wash water by containing it onsite thereby preventing contamination of waterways, groundwater, and storm drains.

Conditions Where Practice Applies

Concrete washout structures are used when concrete equipment is cleaned onsite.

Design Criteria

1. Concrete washout structures must be located a minimum of 50 feet away from open channels, storm drain inlets, sensitive areas, wetlands, buffers, and waterways.

2. The location of the washout structure must be away from construction traffic.

3. Excavated washout structures must be located so that they do not intercept surface runoff. If runoff drains toward an excavated structure, a diversion must be provided around the structure.

4. Prefabricated containers are an acceptable alternative to fabricated washout structures provided the volume is adequate to contain all wash water and solids while maintaining at least 4 inches of freeboard.

Maintenance

It is critical that the concrete washout structure be watertight. The impermeable liner needs to be replaced if damaged (e.g., ripped or punctured). A washout structure that is 75 percent full must be emptied or replaced, and the accumulated material must be disposed of properly. The liner may not be reused. Prefabricated containers require less maintenance. Stored liquids that have not evaporated can be wet vacuumed and disposed of in an approved manner. Prior to forecasted rainstorms, remove liquids or cover the structure to prevent overflows. Hardened solids can be removed whole or broken up for disposal or recycling. Runoff diversion(s) around an excavated washout structure must be maintained until the structure is removed.

DETAIL H-6 ONSITE CONCRETE WASHOUT STRUCTURE

STANDARD SYMBOL

CWS

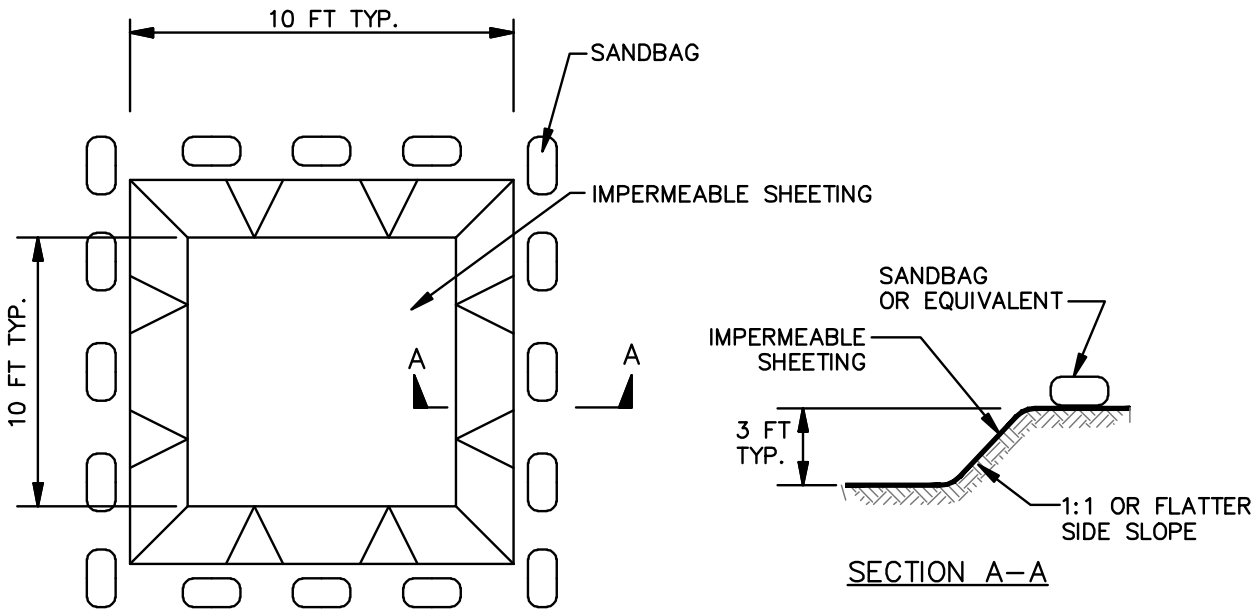

SECTION A–A

PLAN

EXCAVATED WASHOUT STRUCTURE

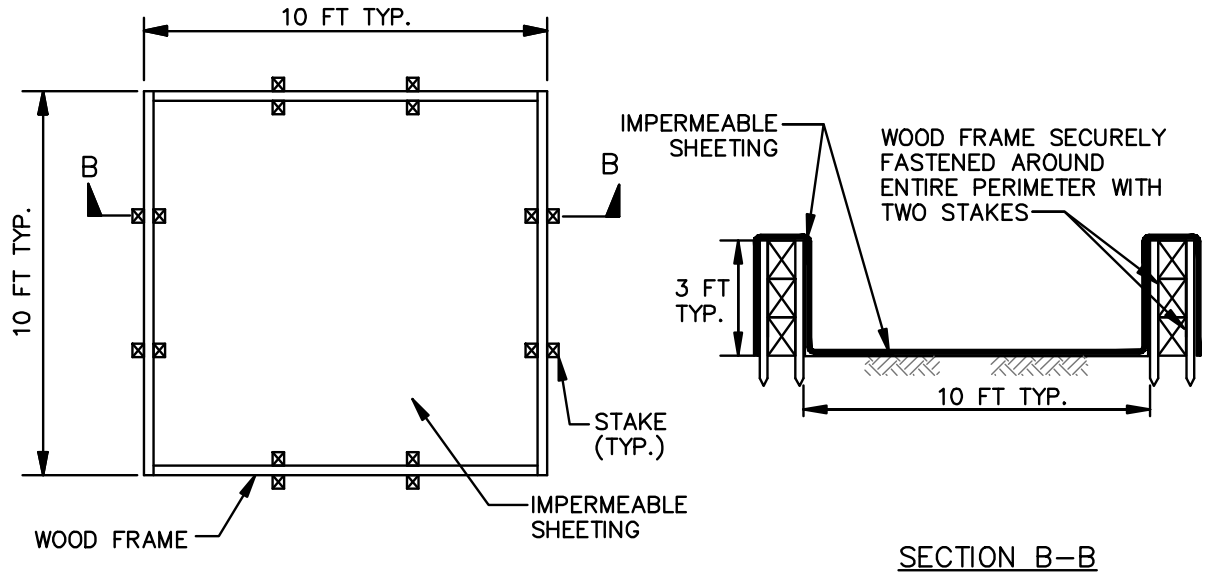

SECTION B–B

PLAN

WASHOUT STRUCTURE WITH WOOD PLANKS

1 OF 2

DETAIL H-6 ONSITE CONCRETE WASHOUT STRUCTURE

STANDARD SYMBOL

CWS

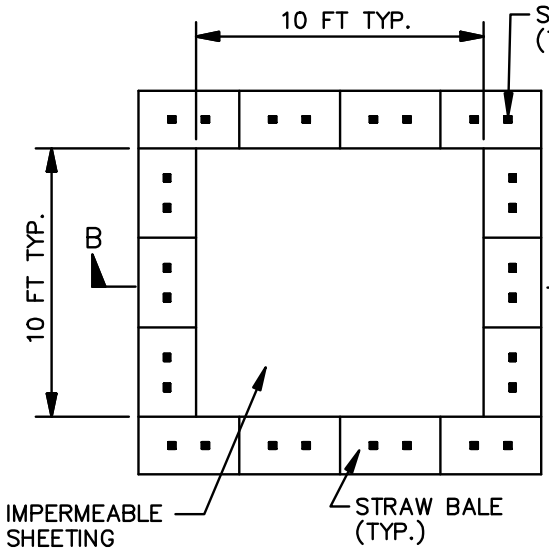

PLAN

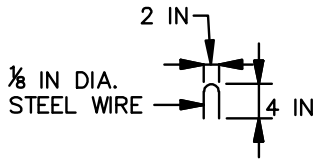

STAPLE DETAIL

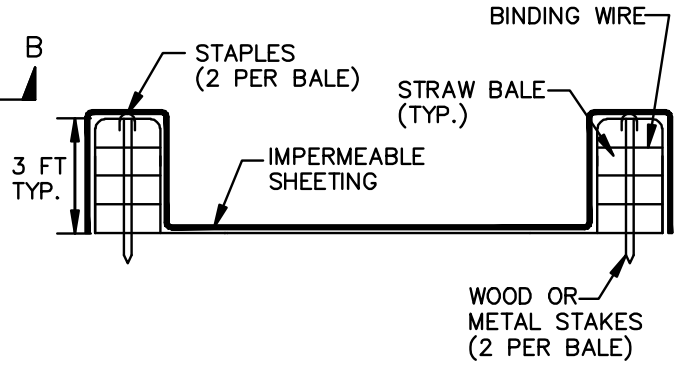

SECTION B–B

NOTE: CAN BE TWO STACKED BALES OR PARTIALLY EXCAVATED TO REACH 3 FT DEPTH

WASHOUT STRUCTURE WITH STRAW BALES

CONSTRUCTION SPECIFICATIONS

1. LOCATE WASHOUT STRUCTURE A MINIMUM OF 50 FEET AWAY FROM OPEN CHANNELS, STORM DRAIN INLETS, SENSITIVE AREAS, WETLANDS, BUFFERS AND WATER COURSES AND AWAY FROM CONSTRUCTION TRAFFIC.

2. SIZE WASHOUT STRUCTURE FOR VOLUME NECESSARY TO CONTAIN WASH WATER AND SOLIDS AND MAINTAIN AT LEAST 4 INCHES OF FREEBOARD. TYPICAL DIMENSIONS ARE 10 FEET X 10 FEET X 3 FEET DEEP.

3. PREPARE SOIL BASE FREE OF ROCKS OR OTHER DEBRIS THAT MAY CAUSE TEARS OR HOLES IN THE LINER. FOR LINER, USE 10 MIL OR THICKER UV RESISTANT, IMPERMEABLE SHEETING, FREE OF HOLES AND TEARS OR OTHER DEFECTS THAT COMPROMISE IMPERMEABILITY OF THE MATERIAL.

4. PROVIDE A SIGN FOR THE WASHOUT IN CLOSE PROXIMITY TO THE FACILITY.

5. KEEP CONCRETE WASHOUT STRUCTURE WATER TIGHT. REPLACE IMPERMEABLE LINER IF DAMAGED (E.G., RIPPED OR PUNCTURED). EMPTY OR REPLACE WASHOUT STRUCTURE THAT IS 75 PERCENT FULL, AND DISPOSE OF ACCUMULATED MATERIAL PROPERLY. DO NOT REUSE PLASTIC LINER. WET–VACUUM STORED LIQUIDS THAT HAVE NOT EVAPORATED AND DISPOSE OF IN AN APPROVED MANNER. PRIOR TO FORECASTED RAINSTORMS, REMOVE LIQUIDS OR COVER STRUCTURE TO PREVENT OVERFLOWS. REMOVE HARDENED SOLIDS, WHOLE OR BROKEN UP, FOR DISPOSAL OR RECYCLING. MAINTAIN RUNOFF DIVERSION AROUND EXCAVATED WASHOUT STRUCTURE UNTIL STRUCTURE IS REMOVED.

BIBLIOGRAPHY

BIBLIOGRAPHY

Alabama Handbook for Erosion Control, Sediment Control, and Stormwater Management on Construction Sites and Urban Areas. 2009. http://swcc.alabama.gov/pdf/Handbooks&Guides/Complete%20ESC%20Handbook10-09.pdf as of August, 2009.

Alexander, R. 2006. "Standard Specification for Compost for Erosion/Sediment Control (Filter Berms and Filter Socks)." Apex, NC.

Barfield, Billy J. and Clar, Michael L. 1985. "Development of New Design Criteria for Sediment Traps and Basins."

Barrett, M.E., Kearney, J.E., McCoy, T.G., Malina, J.F. 1995. "An Evaluation of the Use and Effectiveness of Temporary Sediment Controls." Center for Research in Water Resources. Austin, TX. University of Texas at Austin.

Fifield, J.S., 2004. Designing for Effective Sediment and Erosion Control on Construction Sites. Forester Press, Santa Barbara, CA. 305 pp.

Florida Erosion and Sediment Control Designer and Reviewer Manual. 2007. Florida Department of Transportation, Florida Department of Environmental Protection. Tallahassee, FL.

Georgia Soil and Water Conservation Commission, Manual for Erosion and Sediment Control in Georgia, 5th Edition. 2000. Athens, GA.

Hahn, C.T., Barfield, B.J., Hayes, J.C., Design Hydrology and Sedimentology for Small Catchments. 1994. Academic Press, Inc. San Diego, CA.

Hoan, CT., Tapp, J.S. 1980. "Design of Sedimentation Basins." NCHRP Synthesis of Highway Practices

Maryland Department of the Environment, 2000 Maryland Stormwater Design Manual, Volumes I and II. Chapter 5, Supplement, Environmental Site Design. 2007. Baltimore, MD.

Maryland Department of Transportation, State Highway Administration, Standards and Specifications for Construction and Materials. 2008. Baltimore, MD.

Maryland Department of Transportation, State Highway Administration, Landscape Design Guidelines Soil Stabilization Matting. 2010. Baltimore, MD.

McLaughlin, R.A. and A. Zimmerman, 2009. "Best Management Practices for Chemical Treatment Systems for Construction Stormwater and Dewatering." Final Report, FHWA, January 2009.

New Jersey Department of Transportation, Soil Erosion and Sediment Control Standards. 2008.

New York State Department of Environmental Conservation, New York State Standards and Specifications for Erosion and Sediment Control. 2005. Albany, NY.

North Carolina Erosion and Sediment Control Planning and Design Manual. 2006 (with updates, March 2009). North Carolina Sedimentation Control Commission, North Carolina Department of Environment and Natural Resources, and the North Carolina Agricultural Extension Service. Raleigh, NC.

Oregon Department of Environmental Quality, Erosion and Sediment Control Manual. 2005. Portland, OR.

Pennsylvania Department of Environmental Protection, Bureau of Watershed Management, Erosion and Sediment Control Program Best Management Practice (BMP) Manual. 2000. Technical Guidance No. 363-2134-008. Harrisburg, PA. 181 pp.

Pennsylvania Department of Environmental Protection, Bureau of Watershed Management, Erosion and Sediment Control Program Best Management Practice (BMP) Manual- Draft. 2009. Technical Guidance No. 363-2134-008. Harrisburg, PA. 568 pp.

Schueler, T.R. and Lugbill J., 1990. "Performance of Current Sediment Control Measures and Maryland Construction Sites." Occoquan Watershed Monitoring Lab and Metropolitan Washington Council of Governments (MWCOG). Washington, DC. 90 pp.

Simpson, T.W., Weammert, S.E., Baldwin, A.H. 2007. "Urban Erosion and Sediment Control Best Management Practice Definition and Nutrient and Sediment Reduction Efficiencies for Use in Calibration of the Chesapeake Bay Program, Phase 5.0 Watershed Model." College Park, MD. University of Maryland.

State of California Department of Transportation, Construction Site Best management Practices (BMPs) Manual. 2003. 257 pp.

Sunshine Coast Regional Council, Manual for Erosion & Sediment Control, Version 1.2. 2008. Queensland, Australia.

U.S Department of Agriculture. Natural Resources Conservation Service. 2007. Part 628 Dams. National Engineering Handbook. Chapter 45, Filter Diaphragms.

U.S. Department of Agriculture. Soil Conservation Service. 1968. "Hydraulics of Broad-Crested Spillways." Technical Release No. 39 (TR-39). Paul M. Doubt, Principal Author.

U.S. Environmental Protection Agency, Developing Your Stormwater Pollution Prevention Plan, A Guide for Construction Sites. 2007. EPA-833-R-06-004.

U.S. Environmental Protection Agency. 2009. "Effluent Limitations Guidelines and Standards for the Construction and Development Point Source Category; Final Rule." Federal Register, Notice. Vol. 74, No. 229.

U.S. Environmental Protection Agency. 2008. "National Pollutant Discharge Elimination System, Compost Filter Socks Fact Sheet."

U.S. Environmental Protection Agency. 2006. "National Pollutant Discharge Elimination System, Fiber Rolls Fact Sheet."

U.S. Environmental Protection Agency. 2010. "National Pollutant Discharge Elimination System, Concrete Washout Fact Sheet."

U.S. Environmental Protection Agency. 2011. "Appendix H. Compliance with the C-Factor Stabilization Criteria, National Pollutant Discharge Elimination System General Permit for Stormwater Discharges From Construction Activities."

Ware, A.D., 1979. The Deposits Sedimentation Pond Design Manual. Institute of Mining and Minerals Research, Lexington KY, University of Kentucky.

Warner, R.C. and Collins-Camargo, 2001. "Erosion Prevention and Sediment Control Computer Modeling Project: Executive Summary." Chattahoochee-Flint Regional Development Center Dirt II Committee. Surface Mining Institute, Lexington, KY. June 2001. 30 pp.

Warner, R.C., Sturm, T.W., Torrealba, S. 2007. "Seep Berm Design Manual" as submitted to Georgia EPD and U.S. Environmental protection Agency. Atlanta, GA.

Washington State Department of Ecology, Western Washington Stormwater Management Manual- Volume II Construction Stormwater Pollution Prevention. 2005. Publication No. 05-10-30.

Weesies, G.A. 1998. "Chapter 3. K Factor: Soil Erodibility." Guidelines for the Use of the Revised Universal Soil Loss Equation Version 1.06 on Mined Lands, Construction Sites, and Reclaimed Lands. August 1998. 12 pp. Office of Technology Transfer, Western Regional Coordinating Center, Office of Surface Mining, Denver, CO. August 1998. 12 pp.

GLOSSARY

GLOSSARY

ACCELERATED STABILIZATION - The providing of temporary or permanent cover by the end of the work day to prevent erosion.

ACID SOIL - A soil giving an acid reaction below a pH of 6.6 throughout most or the entire portion occupied by roots.

ANTI-SEEP COLLAR - An impermeable diaphragm, usually of sheet metal or concrete, installed at intervals within the zone of saturation along the conduit of a principal spillway to increase the seepage length along the conduit and thereby prevent piping or seepage along the conduit.

ANTI-VORTEX DEVICE - A device placed on the top of a riser or at the entrance of a pipe to prevent the formation of a vortex.

APRON - A lining to protect a surface from erosion (e.g., the area below culverts or spillways).

BARREL - The closed conduit used to convey water under or through a dam; part of a principal spillway.

BASE FLOW - The stream discharge from ground water contribution.

CHANNEL - An open drainage conveyance.

CHANNEL STABILIZATION - Erosion prevention of open drainage conveyance using jetties, drop structures, revetments, linings, vegetation, and other measures.

CLAY (SOILS) - 1. Mineral soil consisting of particles less than 0.002 millimeters in equivalent diameter. 2. A soil texture class. 3. Fine grained soil (more than 50 percent passing the No. 200 sieve) that has a high plasticity index in relation to the liquid limit. (Unified Soil Classification System).

CLEAR - To remove the vegetative cover while leaving the root mat intact.

COFFERDAM - A barrier or device used to prevent water from entering a work area.

COMPACTION – The process of uniting firmly. With respect to construction work with soils, compaction is any process by which the soil grains are rearranged to decrease void space and bring them into closer contact with one another, thereby increasing the weight of solid material per unit of volume, increasing the shear and bearing strength, and reducing permeability.

CONCENTRATED FLOW - Water, usually stormwater runoff that converges in well-defined channels, ditches, gullies, streams, or pipes.

CONDUIT - Any channel intended for the conveyance of water, whether open (swale) or closed (pipe).

CONTOUR - A line drawn on a map representing or connecting points of the same elevation.

CRADLE - A structure usually of concrete shaped to fit around the bottom and sides of a conduit for support.

CREST - The control surface of a riser or weir.

CULTIPACKER SEEDER - A tool equipped with a seedbox that drops the seed between rollers to place the seed on firm soil where it is pressed into soil by the second corrugated roller.

CUT - Portion of land surface or area from which earth has been removed or will be removed by excavation; the depth below original ground surface to excavated surface.

CUT-AND-FILL - Process of moving earth by excavating part of an area and using the excavated material for embankments or increasing surface elevations in another area.

CUT-OFF TRENCH - An excavation below an embankment filled with relatively impervious material intended to reduce seepage of water through porous strata.

DAM - A barrier to confine or raise water elevation for storage or diversion, to create a hydraulic head, to prevent gully erosion, or to retain soil or sediment.

DEPOSITION - The accumulation of settled material due to reduced movement of the transporting agent, (e.g., water or wind, ice or gravity).

DISTURBED AREA - A location where the natural vegetative soil cover has been removed or altered and, therefore, is susceptible to erosion.

DOLOMITIC (LIMESTONE) - Liming materials that contain more than 6 percent magnesium (mg); high magnesium lime.

DRAINAGE - The removal of excess surface water or ground water from land by means of surface or subsurface drains.

DRAINAGE AREA - The acreage contributing runoff to a single point measured in a horizontal plane that is enclosed by a ridge line.

EMERGENCY SPILLWAY - A dam spillway designed and constructed to discharge flow in excess of the principal spillway design discharge.

EROSION - The wearing away of the land by the action of water, wind, ice, or gravity.

EROSIVE VELOCITIES - Velocities of water that are high enough to wear away the land surface. Exposed soil will generally erode faster than stabilized soils. Erosive velocities will vary according to the soil type, slope, and structural or vegetative stabilization used to protect the soil.

FREEBOARD (HYDRAULICS) - The distance between the maximum water surface elevation and the top of retaining bank or structure.

GABION - A flexible, wire mesh basket composed of cells filled with rock.

GABION MATTRESS - A thin gabion, usually six, nine, or twelve inches thick.

GRADE - To disturb earth by, including but not limited to, any excavation, filling, stockpiling, grubbing, removing root mat or topsoil, or any combination thereof.

GRADING UNIT - The maximum contiguous area of disturbed earth on a site allowed to be graded at a given time.

HEAD (HYDRAULICS) – The height of water above any plane of reference.

HIGHLY ERODIBLE SOILS - Those soils with slopes greater than 15 percent or those soils with a K value greater than 0.35 and with slopes greater than 5 percent.

HYDROSEEDER - A machine for applying seed, fertilizer, lime, short fiber wood, or paper mulch to the soil surface.

IMPERVIOUS CORE - Area within an embankment consisting of dense soils intended to reduce seepage of water through porous strata.

LIME - Basic calcareous materials used to raise pH of acid soils for benefit of plants being grown. May be ground limestone or hydrated lime.

MANNING'S EQUATION (HYDRAULICS) - A formula used to predict the velocity of water flow in an open channel or pipeline:

$$v = \frac{1.486R^{2/3}s^{1/2}}{n}$$

Where v is the mean velocity of flow in feet per second; R is the hydraulic radius; s is the slope of the energy gradient or, for assumed uniform flow, the slope of the channel in feet per foot; and n is the Manning's roughness coefficient or retardance factor of the channel lining.

MULCH - Covering on surface of soil to protect and enhance certain characteristics, such as water retention qualities.

NITROGEN FIXING BACTERIA - Bacteria having the ability to combine nitrogen with oxygen or hydrogen to create compounds that are usable by plants. Inoculation of legume seeds is one way to ensure a source of these bacteria for specified legumes.

NON-EROSIVE VELOCITY – A sufficiently low velocity of water to prevent detachment and movement of soil or rock.

OUTFALL - The point where water is discharged.

OUTLET - The point where concentrated water is discharged.

pH - A number denoting the common logarithm of the reciprocal of the hydrogen ion concentration. A value of 7.0 denotes neutrality; higher values indicate alkalinity; and lower values indicate acidity.

PHASING - Sequential progression of site development activities during construction.

PHREATIC LINE - The demarcation of the saturation zone within an embankment.

PIPING - Movement of soil material caused by seepage of water through an embankment.

RECYCLED CONCRETE EQUIVALENT - Cementitious material that is broken into the stone sizes required for the application, angular, resistant to crumbling, and contains no steel reinforcement. May be substituted for stone except in permanent applications or where stone must be "washed."

RIGHT-OF-WAY – The legal right of passage over another's property; a route that is lawful to use.

RIPRAP - Broken rock, cobbles, or boulders placed on earthen surfaces, such as outfalls, outlets, and channel linings, for protection against soil erosion.

ROUGHNESS COEFFICIENT ("n") - Manning's "n" is the factor in velocity and discharge formulas representing the effect of channel roughness on energy losses in flowing water.

RUNOFF - That portion of precipitation that is discharged from a drainage area.

SEDIMENT - Soil or other surficial materials transported or deposited by the action of water, wind, ice, gravity, or other artificial means.

SHEET FLOW - Water, usually unconcentrated stormwater runoff, flowing in a thin, uniform layer over the ground surface.

SLURRY - A thickened, aqueous mixture of such things as seed, fertilizer, short fiber mulch or soil.

SOD - An area of grass-covered soils held together by matted roots; turf.

SOIL TEST - Chemical analysis of soil to determine the need for fertilizers or amendments for the species of plant being grown.

SOIL TEXTURE - The relative proportions of various sized soil particles.

SPILLWAY - A control section from an impoundment that conveys excess water.

STABLE AREA - An area sufficiently covered by erosion-resistant material, such as a good cover of grass or paving by asphalt, concrete, or stone, that erosion of the underlying soil does not occur.

STABILIZE – To protect exposed soils from erosion by the application of seed and mulch, seed and matting, sod, other vegetative measures, and/or structural means.

STRUCTURAL (SOIL) - The combination or arrangement of primary soil particles into secondary particles, units, or peds. (Dune sand is structureless.)

SUBGRADE - The soil compacted to support a structure or a pavement system or prepared to provide infiltration.

TAILWATER (HYDRAULICS) - Water surface at the outlet immediately downstream of a structure (i.e., culvert, discharge pipe).

TIER II WATERS – Tier II waters are “high quality waters” as listed in COMAR 26.08.02.04-1.

TOPSOIL - Fertile or desirable soil material used to top-dress roadbanks, subsoils, parent material, etc.

TRASH RACK - A vertically extended grill, grate, or other device at the intake of a channel, pipe, drain or spillway for the purpose of preventing oversize debris from entering the structure.

UNIFIED SOIL CLASSIFICATION SYSTEM - A classification system based on the identification of soils according to their particle size, gradation, plasticity index, and liquid limit.